# K-WTEH 2-TLG PC-BEHAEL MANO STAN-MI

Service units, 2-piece with polycarbonate bowl and pressure gauge

HANSA-FLEX

## Properties

| | |
|---|---|
| **Input pressure** | Max. 16 bar (polycarbonate bowl), Max. 25 bar (metal bowl) |
| **Media temperature** | max. 60 °C |
| **Ambient temperature** | Max. 60 °C |
| **Flow rate** | 350 l/min (2-piece), 300 l/min (3-piece) |
| **Pore size in filter element** | 5 µm |
| **Sealant** | NBR |
| **Housing** | Die-cast zinc, painted silver |
| **Dropper** | PA (polycarbonate bowl), Zinc-glass-NBR (metal bowl) |
| **Drain valve** | Semi-automatic for variant with polycarbonate bowl, Manual for variant with metal bowl |
| **Flow rate measurement** | At P1 = 8 bar, P2 = 6 bar and pressure drop Δp = 1 bar |



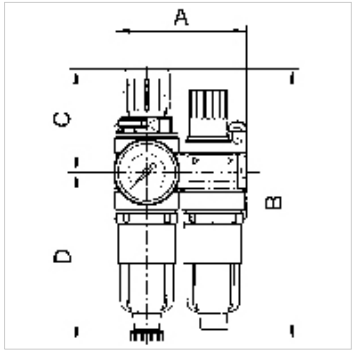


## Note

Further information on request

## Description

Compact, two or three-piece service units consisting of a reversible diaphragm pressure regulator, independent of inlet pressure, with self-relieving design, combined with a centrifugal separator and a proportional lubricator.

## Item

| Identification | Thread | Control range | A (mm) | B | C (mm) | D (mm) | DN |
|---|---|---|---|---|---|---|---|
| **K- 07 25 14 89** | G 1/8 | 0.5 - 10 bar | 85,0 | 167.0 mm | 65,0 | 102,0 | 5 |
| **K- 07 25 14 91** | G 1/4 | 0.5 - 10 bar | 85,0 | 167.0 mm | 65,0 | 102,0 | 5 |

## Spare parts

| | |
|---|---|
| **K-HALTERBAUSATZ** | Holder |
| **K-SCHALTTAFELMUTTER** | Nut |
| **K-ERSATZBEHAELTER MULTI MINI** | Spare tank »multifix-mini« & »standard-mini« |
| **K-PC-BEHAELTER FILTER MULTIFIX** | Polycarbonate tank filter |
| **K-VERSCHLEI-SATZ** | Set of wearing parts |
| **K-FILTERELEMENT** | Filter element |
| **K-AUTOMAT ABLASSVENTIL** | Automatic drain valve |
| **K-TROPFAUFSATZ POLYCARBO** | Drip attachment polycarbonate |
| **K-TROPFAUFSATZ METALL** | Drip attachment metal |
| **K-LOESBARE DOPPELNIPPEL MS** | Double nipples |
| **K-XV AGM MS NI** | Double nipples, parallel male thread, nickel-plated brass |

*Despite careful checking, we cannot guarantee the accuracy of all information included on this site, and we accept no liability.*