K-FI REGL PC-BEHAEL MANO VARIOBLOC

Filter regulators with polycarbonate bowl and pressure gauge

HANSA-FLEX

Properties

Input pressure	Max. 16 bar (polycarbonate bowl), Max. 20 bar (metal bowl)
Media temperature	max. 50 °C
Ambient temperature	Max. 50 °C (polycarbonate bowl), Max. 80 °C (metal bowl)
Pore size in filter element	40 µm
Sealant	NBR
Spring bonnet	POM
Housing	Die-cast zinc
Diaphragm	NBR
Drain valve	Manual
Flow rate measurement	At P1 = 10 bar, P2 = 6 bar and pressure drop Δp = 1 bar



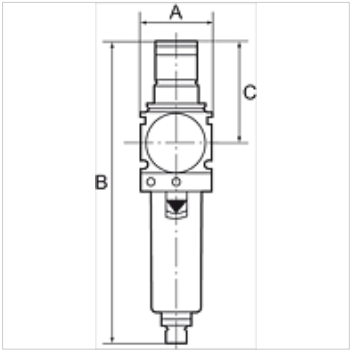

Note

Further information on request

Description

Reversible diaphragm pressure regulators, independent of inlet pressure, with self-relieving design, combined with a centrifugal separator. The pressure setting can be locked by pushing the knob down. Approved series in modern industrial design, with the following key benefits: Simple handling, Convenient modular assembly thanks to innovative fasteners, Excellent flow values.

Ordering information

Filter regulators are also available with bowl guard or metal bowl. Filter regulators are also available in lockable version. Please ask for more information.

Additional information

Filter regulators are also available with bowl guard or metal bowl. Filter regulators are also available in lockable version. Please ask for more information.

Item

Identification	Thread	Control range	Flow rate (L/min)	A (mm)	B	C (mm)
K- 07 25 06 85	G 1/4	0.5 - 10 bar	2000	48,0	203,0 mm	68,0
K- 07 25 06 87	G 3/8	0.5 - 10 bar	3000	48,0	203,0 mm	68,0
K- 07 25 06 89	G 1/2	0.5 - 10 bar	5500	70,0	273,0 mm	98,0
K- 07 25 06 91	G 3/4	0.5 - 10 bar	6500	70,0	273,0 mm	98,0
K- 07 25 06 93	G 1	0.5 - 10 bar	6500	124,0	273,0 mm	98,0

Spare parts

K-VERSCHLEI-SATZ VARIOBLOC	Set of wearing parts
K-ERSATZBEHAELTER VARIOBLOC POLY	Spare tank Polycarbonat
K-FILTERELEMENT VARIOBLOC	Filter element
K-ABLASSVENTIL AUTO	Fully-automatic drain valve with Adapter G 1/8

Despite careful checking, we cannot guarantee the accuracy of all information included on this site, and we accept no liability.