K-NEBELOELER METALLBEHAE S T VARIOB

Oil-mist lubricators with metal bowl, incl. sight glass and metal sight dome

Properties

Input pressure	Max. 16 bar (polycarbonate bowl), Max. 20 bar (metal bowl)
Media temperature	max. 50 °C
Ambient temperature	Max. 50 °C (polycarbonate bowl), Max. 80 °C (metal bowl)
Sealant	NBR
Housing	Die-cast zinc
Dropper	PA
Oil grade	CL 32 acc. to DIN 51517 - ISO VG 32
Flow rate measurement	At P1 = 6 bar and pressure drop Δp = 1 bar



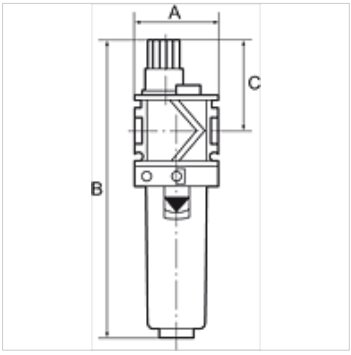

Note

Further information on request

Description

Proportional lubricators, oil can be filled under pressure. Approved series in modern industrial design, with the following key benefits: Simple handling, Convenient modular assembly thanks to innovative fasteners, Excellent flow values.

Ordering information

Oil-mist lubricators are also available with bowl guard or metal bowl.

Item

Identification	Thread	Flow rate (L/min)	A (mm)	B	C (mm)
K- 07 25 09 14	G 1/4	3400	48,0	180.0 mm	60,0
K- 07 25 09 16	G 3/8	4400	48,0	180.0 mm	60,0
K- 07 25 09 18	G 1/2	4600	70,0	224.0 mm	65,0
K- 07 25 09 20	G 3/4	7500	70,0	224.0 mm	65,0
K- 07 25 09 22	G 1	7500	124,0	224.0 mm	65,0

Spare parts

K-ERSATZBEHAELTER VARIOBLOC POLY	Spare tank Polycarbonat
K-TROPFAUFSATZ VARIOBLOC	Drip attachment
K-TROPFAUFSATZ METALL	Drip attachment metal

Despite careful checking, we cannot guarantee the accuracy of all information included on this site, and we accept no liability.