K-WTEH 3-TLG MET SICH TROPF VARIOBL

Service units, 3-piece with metal bowl, incl. sight glass and metal sight dome

HANSA-FLEX

Properties

Input pressure	Max. 16 bar (polycarbonate bowl), Max. 20 bar (metal bowl)
Media temperature	max. 50 °C
Ambient temperature	Max. 50 °C (polycarbonate bowl), Max. 80 °C (metal bowl)
Pore size in filter element	40 µm
Sealant	NBR
Spring bonnet	POM
Housing	Die-cast zinc
Diaphragm	NBR
Dropper	PA
Drain valve	Manual
Flow rate measurement	At P1 = 10 bar, P2 = 6 bar and pressure drop Δp = 1 bar



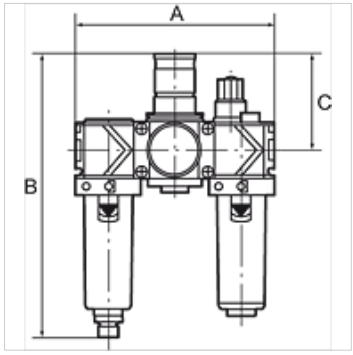

Note

Further information on request

Description

Two or three-piece service units consisting of a reversible diaphragm pressure regulator, independent of inlet pressure, with self-relieving design, combined with a centrifugal separator and a proportional lubricator. Approved series in modern industrial design, with the following key benefits: Simple handling, Convenient modular assembly thanks to innovative fasteners, Excellent flow values.

Ordering information

Service units are also available with bowl guard or metal bowl. Service units are also available in other control ranges (0.5 - 6 bar and 0.5 - 16 bar) and in lockable version. Please ask for more information.

Additional information

Service units are also available with bowl guard or metal bowl. Service units are also available in other control ranges.

Item

Identification	Thread	Control range	Flow rate (L/min)	A (mm)	B	C (mm)
K- 07 25 14 12	G 1/4	0.5 - 10 bar	1500	144,0	201,0 mm	68,0
K- 07 25 14 14	G 3/8	0.5 - 10 bar	1800	144,0	201,0 mm	68,0
K- 07 25 14 16	G 1/2	0.5 - 10 bar	3400	210,0	274.0 mm	98,0
K- 07 25 14 18	G 3/4	0.5 - 10 bar	5000	210,0	274.0 mm	98,0
K- 07 25 14 20	G 1	0.5 - 10 bar	5000	264,0	274.0 mm	98,0

Spare parts

K-VERSCHLEI-SATZ VARIOBLOC	Set of wearing parts
K-FILTERELEMENT VARIOBLOC	Filter element
K-ERSATZBEHAELTER VARIOBLOC POLY	Spare tank Polycarbonat
K-TROPFAUFSATZ VARIOBLOC	Drip attachment
K-ABLASSVENTIL AUTO	Fully-automatic drain valve with Adapter G 1/8

Despite careful checking, we cannot guarantee the accuracy of all information included on this site, and we accept no liability.