K-HS RD

Unidirectional banjo valves, pneumatic release, port 2 with female thread

Properties

Working pressure	0.3 - 10 bar
Pilot pressure	0.5 - 2.5 bar, depending on operating pressure
Media temperature	max. 60 °C
Installation position	Any. The ring piece must be positioned before the valve is tightened
Material	Nickel-plated brass
Sealant	Perbunan



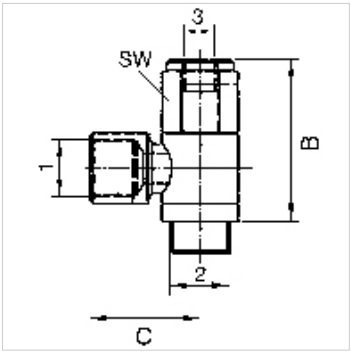

Note

Further information on request

Description

For stopping and positioning the cylinder movement: If a control signal is present at port 3 (see drawing), air can flow to and from the cylinder. If no control signal is present, the cylinder exhaust air is shut off by the unidirectional valve.
The cylinder is stopped. Releasable unidirectional valves are screwed directly onto the cylinder instead of the normal pipe connections.

Item

Identification	Port 1	Port 2	Connection 3	B (mm)	C (mm)
K- 07 15 07 04	G 1/8	G 1/8	M 5	38,0	21,5
K- 07 15 07 03	G 1/4	G 1/4	G 1/8	43,0	25,4
K- 07 15 07 05	G 3/8	G 3/8	G 1/8	46,0	31,6
K- 07 15 07 02	G 1/2	G 1/2	G 1/8	52,0	32,0

Despite careful checking, we cannot guarantee the accuracy of all information included on this site, and we accept no liability.