K-KDR SCHNVERSCHR

Mini pressure regulators, discharge port on thread, quick-lock screw fitting

Properties

Control range	0 - 8 bar
Input pressure	Max. 10 bar
Temp. range	0 °C to +70 °C
Hollow screw, pivot arm, regulating screw	Nickel-plated brass
Internal parts	Brass with a bare metal surface
lip seal O-ring	NBR
Seals (non-detachable)	Polyamide (glass fibre-reinforced)



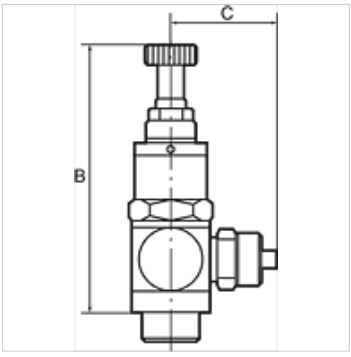

Note

Further information on request

Description

Piston pressure regulator with self-relieving design, hollow bolt and pivoting ring piece. The regulator is screwed directly into the consumer (e.g. cylinder, handling equipment, etc.). The working pressure can thus be adapted to the specific application.

Item

Identification	C (mm)	for hose	Thread	AF	B (mm)
K- 07 25 08 33	16,0	G 1/8 IG	G 1/8	15 mm	56,0
K- 07 25 08 34	25,0	5 mm / 3 mm	G 1/8	15 mm	56,0
K- 07 25 08 35	25,0	6 mm / 4 mm	G 1/8	15 mm	56,0
K- 07 25 08 36	25,0	8 mm / 6 mm	G 1/8	15 mm	56,0
K- 07 25 08 31	26,5	6 mm / 4 mm	G 1/4	17 mm	63,0
K- 07 25 08 32	27,5	8 mm / 6 mm	G 1/4	17 mm	63,0
K- 07 25 08 30	28,5	10 mm / 8 mm	G 1/4	17 mm	63,0

Despite careful checking, we cannot guarantee the accuracy of all information included on this site, and we accept no liability.