K-3/2 ANFAV 230 V AC, 50 HZ HW G

Start-up valves, power supply 230 V AC, 50 Hz, with »HW« mounting bracket and silencer

Properties

Input pressure	2.5 - 9 bar
Media temperature	max. 70 °C
Ambient temperature	Max. 70 °C
Electrical connection	Coupler plug PG 9 - form B
Sealant	NBR
Housing	Die-cast aluminium
Flow rate measurement	At P1 = 8 bar, P2 = 6 bar and pressure drop Δp = 1 bar
More information	User manual on request



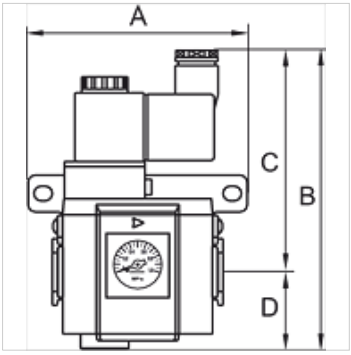

Item

Identification	Thread	Flow rate (L/min)	A (mm)	B	C (mm)	D (mm)	Size
K- 07 25 12 04	G 1/4	1600	65,0	131.0 mm	97,0	34,0	300
K- 07 25 12 06	G 3/8	2500	65,0	131.0 mm	97,0	34,0	300
K- 07 25 12 08	G 1/2	2500	65,0	131.0 mm	97,0	34,0	300
K- 07 25 12 10	G 3/8	4500	78,0	142.5 mm	102,0	40,5	400
K- 07 25 12 12	G 1/2	4500	78,0	142.5 mm	102,0	40,5	400

Accessories

K-VERBINDUNGELEMENTE	Connecting sets
K-WANDHALTER	Wall bracket
K-HALTERBAUSATZ	Holder

Despite careful checking, we cannot guarantee the accuracy of all information included on this site, and we accept no liability.