K-WTST SAFETY BKR SCHA AN DR MULTI

SAFETY service unit sets, comprising a ball valve with silencer, start-up valve and pressure regulator with lock cylinder

Properties

Input pressure	2 - 16 bar
Output pressure	0.5 - 10 bar
Temp. range	Max. 60 °C
Media	Compressed air
Sealant	NBR
Container	Polycarbonate (with bayonet lock) and bowl guard
Spring bonnet	POM
Filter element	Cellpor (PE) 5 µm
Housing	Die-cast zinc
Diaphragm	NBR
Drain valve	Semi-automatic
Flow rate measurement	At P1 = 8 bar, P2 = 6 bar and pressure drop Δp = 1 bar
More information	see data sheets of the individual components (on request)
connection venting ball valve	Silencer



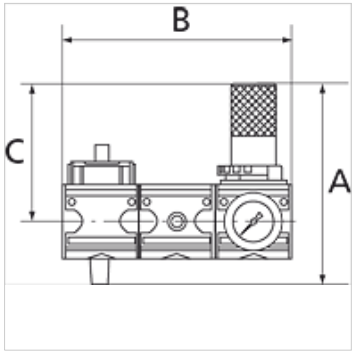

Description

These compressed air service unit sets, comprising a ball valve with silencer, a start-up valve and one out of a pressure regulator, filter regulator or service unit, meet even the strictest requirements for operating reliability and accident prevention!

Ordering information

The price does not include a padlock. Please order separately. For accessories and spare parts, refer to individual components: ball valve, start-up valve, pressure regulator, filter regulator, 2-piece service unit.

Item

Identification	Thread	Control range	Flow rate (L/min)	A (mm)	B	C (mm)
K- 07 25 15 11	G 1/4	2 - 10 bar	1000	128,0	137.8 mm	94,0
K- 07 25 15 12	G 1/2	2 - 10 bar	4000	189,0	200.8 mm	122,0
K- 07 25 15 13	G 1	2 - 10 bar	12000	241,7	282.8 mm	157,0

Despite careful checking, we cannot guarantee the accuracy of all information included on this site, and we accept no liability.