K-ZFL ABSP-KLAPPEN EINFACH

Butterfly valves, with single-acting actuator - spring to close, min. pilot pressure 5 bar

HANSA FLEX

Properties

Design	Pneumatic actuators, in double- or single acting version
Operating pressure	Max. 16 bar
Operating temperature	-15 °C to +120 °C
Media	Water / steam, salt water, salt water, ester, ketone, alkali, caustic soda, sodium hydroxide. Not recommended for hydrocarbons
Pilot pressure	5.5 bar
Valve adapter	Supplied as standard, operated by a 3/2- or 5/2-way valve
Angle of rotation	90 °
Drive	aluminium eloxed
Drive seal	NBR
Housing	Grey cast iron GG25 epoxy resin coated, RAL 5015
Seal	EPDM
Shaft	SS416
Shaft seal	EPDM
Piloting	



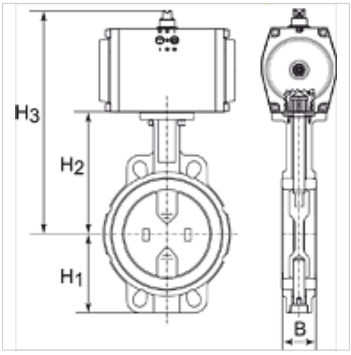

Note

Further information on request

Item

Identification	Washer	DN	B (mm)	H1 (mm)	H2 (mm)	H3 (mm)	L (mm)
K- 07 30 03 36	Stainless Steel CF8M/1.4404	40	38,0	68,0	108,0	238,0	94,0
K- 07 30 03 37	Stainless Steel CF8M/1.4404	50	47,0	71,0	143,0	273,0	100,0
K- 07 30 03 38	Stainless Steel CF8M/1.4404	65	49,0	78,0	155,0	285,0	115,0
K- 07 30 03 39	Stainless Steel CF8M/1.4404	80	47,0	89,0	162,0	292,0	127,0
K- 07 30 03 40	Stainless Steel CF8M/1.4404	100	56,0	102,0	178,0	348,0	163,0
K- 07 30 03 42	Stainless Steel CF8M/1.4404	125	59,0	123,0	191,0	361,0	190,0
K- 07 30 03 44	Stainless Steel CF8M/1.4404	150	59,0	138,0	265,0	395,0	216,0

Despite careful checking, we cannot guarantee the accuracy of all information included on this site, and we accept no liability.