K-S-BKR M ENTL-BOHR ABSCHL

Safety ball valves, lockable, with relief port

Properties

Operating temperature	-10 °C to + 100 °C (depending on operating pressure)
Relief port	M 5 (>1": Relief port G 1/4")
Thread description	Rp thread acc. to EN 10226
Housing	Nickel-plated brass
Hand lever	Steel - PVC coated
Ball	hardchrome-plated brass
Ball seals	PTFE
Stem seal	PTFE



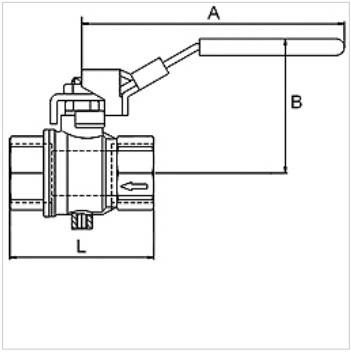

Note

G thread acc. to DIN EN ISO 228-1, with ISO flange plate (acc. to ISO 5211)
Further information on request

Description

2/2-way safety ball valves, two parts, made of nickel-plated brass. Specially designed for pneumatic applications.
The valve shuts off the supply line and bleds the application area. Lockable hand lever in closed position.

Additional information

The price does not include a padlock. Please order separately.

Item

Identification	DN	Thread	PN (bar)	A (mm)	B (mm)	L (mm)
K- 07 30 29 29	8	Rp 1/4	14	96,0	49,0	45,0
K- 07 30 29 30	10	Rp 3/8	14	96,0	49,0	45,0
K- 07 30 29 31	15	Rp 1/2	14	96,0	51,0	59,0
K- 07 30 29 32	20	Rp 3/4	14	117,0	60,0	64,0
K- 07 30 29 33	25	Rp 1	14	117,0	64,0	81,0
K- 07 30 29 34	32	Rp 1 1/4	14	157,0	80,0	93,0
K- 07 30 29 35	40	Rp 1 1/2	14	157,0	86,0	102,0
K- 07 30 29 36	50	Rp 2	14	157,0	93,0	121,0

Accessories

K-VORHAENGESCHLOSS	Padlock

Despite careful checking, we cannot guarantee the accuracy of all information included on this site, and we accept no liability.