K-NEBELOELER PC-BEHAELTER S VARIOBL

Oil-mist lubricators with polycarbonate bowl and bowl guard

HANSA-FLEX

Properties

Input pressure	Max. 16 bar (polycarbonate bowl), Max. 20 bar (metal bowl)
Media temperature	max. 50 °C
Ambient temperature	Max. 50 °C (polycarbonate bowl), Max. 80 °C (metal bowl)
Sealant	NBR
Housing	Die-cast zinc
Dropper	PA
Oil grade	CL 32 acc. to DIN 51517 - ISO VG 32
Flow rate measurement	At P1 = 6 bar and pressure drop Δp = 1 bar



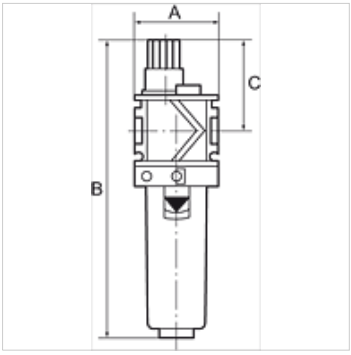

Note

Further information on request

Description

Proportional lubricators, oil can be filled under pressure. Approved series in modern industrial design, with the following key benefits: Simple handling, Convenient modular assembly thanks to innovative fasteners, Excellent flow values.

Ordering information

Oil-mist lubricators are also available with bowl guard or metal bowl.

Item

Identification	Thread	Flow rate (L/min)	A (mm)	B	C (mm)
K- 07 25 22 87	G 1	7500	124,0	224.0 mm	57,0
K- 07 25 22 88	G 3/4	7500	70,0	224.0 mm	57,0
K- 07 25 22 89	G 1/2	4600	70,0	224.0 mm	57,0
K- 07 25 22 90	G 3/8	4400	48,0	171.0 mm	52,0
K- 07 25 22 91	G 1/4	3400	48,0	171.0 mm	52,0

Despite careful checking, we cannot guarantee the accuracy of all information included on this site, and we accept no liability.