K-WTEH 3-TLG MET SICH WAND H G

Service units, 3-piece with metal bowl, sight glass and joiner for wall mounting, semi-automatic drain valve

Properties

Input pressure	Max. 10 bar
Media temperature	max. 70 °C
Ambient temperature	Max. 70 °C
Pore size in filter element	5 µm
Sealant	NBR
Spring bonnet	POM
Housing	Die-cast aluminium
Dropper	Brass/POM
Drain valve	Semi- or fully-automatic
Flow rate measurement	At P1 = 8 bar, P2 = 6 bar and pressure drop Δp = 1 bar
More information	User manual on request



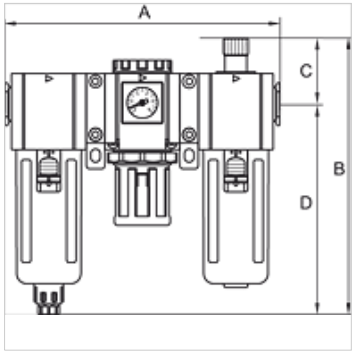

Item

Identification	Thread	Control range	Flow rate (L/min)	A (mm)	B	C (mm)	D (mm)	Size
K- 07 25 14 31	G 3/4	1.5 - 9 bar	3750	295,0	280.5 mm	61,5	219,0	600
K- 07 25 14 33	G 1	1.5 - 9 bar	3750	295,0	280.5 mm	61,5	219,0	600

Accessories

K-VERSCHLEI-SATZ	Set of wearing parts
K-ERSATZMEMBRANE	Replacement diaphragm
K-ADAPTERPLATTEN HANSA	Adapter plate HANSA
K-FILTERELEMENT	Filter element
K-ERSATZBEHAELTER G UND G-MINI POLY	Spare tanks »G« Series and »G-mini« Series Polycarbonat
K-VERBINDUNGELEMENTE	Connecting sets
K-WANDHALTER	Wall bracket

Despite careful checking, we cannot guarantee the accuracy of all information included on this site, and we accept no liability.