K-FI METALLBEHAEL SICHT H G

Filters with metal bowl, sight glass and »HW« mounting bracket, semi-automatic drain valve

Properties

Input pressure	Max. 10 bar
Media temperature	max. 70 °C
Ambient temperature	Max. 70 °C
Working pressure	1.5 - 9 bar
Pore size in filter element	5 µm
Sealant	NBR
Housing	Die-cast aluminium
Drain valve	Semi- or fully-automatic
Flow rate measurement	At P1 = 8 bar, P2 = 6 bar and pressure drop Δp = 1 bar
More information	User manual on request



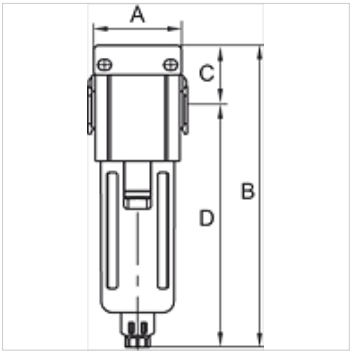

Item

Identification	Thread	Flow rate (L/min)	A (mm)	B	C (mm)	D (mm)	Size
K- 07 25 06 45	G 3/4	7800	85,0	256,0 mm	37,0	219,0	3
K- 07 25 06 47	G 1	7800	85,0	256,0 mm	37,0	219,0	3

Accessories

K-ERSATZBEHAELTER G UND G-MINI POLY	Spare tanks »G« Series and »G-mini« Series Polycarbonat
K-SCHUTZKORB G	Protective cage
K-FILTERELEMENT	Filter element
K-HALTERBAUSATZ	Holder
K-VERBINDUNGELEMENTE	Connecting sets
K-WANDHALTER	Wall bracket

Despite careful checking, we cannot guarantee the accuracy of all information included on this site, and we accept no liability.