K-SCHALLDAE SINTERBR GE MS

Silencers, sintered bronze, with brass hexagon nut and brass thread

HANSA-FLEX

Properties

Operating pressure	Max. 10 bar
Operating temperature	-10 °C to +200 °C
sound level 6bar	80 ~ 90 dB(A)



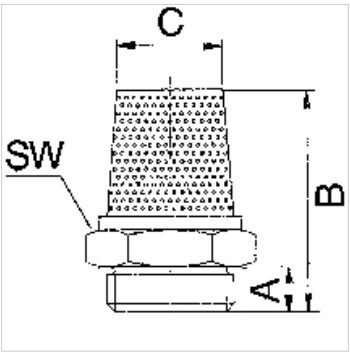

Description

For reducing the exhaust noise generated by pneumatic equipment.

Item

Identification	Thread	A (mm)	B (mm)	C (mm)	AF
K- 07 40 35 11	M 5	5,0	20,8	4,0	9 mm
K- 07 40 35 12	G 1/8	5,5	22,8	8,0	13 mm
K- 07 40 35 13	G 1/4	7,0	33,5	10,0	17 mm
K- 07 40 35 14	G 3/8	9,0	41,7	14,0	22 mm
K- 07 40 35 15	G 1/2	10,0	48,5	18,0	24 mm

Despite careful checking, we cannot guarantee the accuracy of all information included on this site, and we accept no liability.