K-BKR ELK 230 VAC MS

Brass ball valves with electric actuator 230 VAC, 50 Hz

HANSA-FLEX

Properties

Operating pressure	DN 15 - DN 32: max. 40 bar; DN 40 - DN 50: max. 25 bar
Operating temperature	-20 °C to +70 °C
Duty cycle	ED 30 %
Relative humidity	30 % to 95 %
Valve positions	Manually operated
protection class	IP 67
Actuating time	13 sec. = 230 VAC, 50 Hz 15 sec. = 24 VDC
Ambient temperature	-30 °C to +70 °C
Mounting flange	ISO 5211
Housing	Aluminium, powder-coated
Ball valve	brass nickel plated
Ball, operating shaft	Chrome-plated brass
Ball seals	PTFE, glass fibre-reinforced
Selector shaft seal	FKM



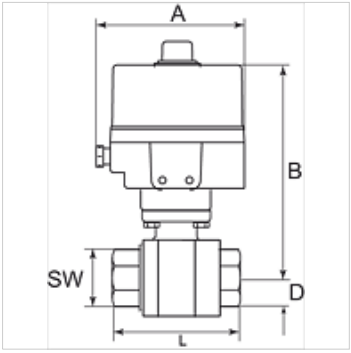

Note

Further information on request

Description

Voltage range 230 VAC, 50 Hz or 24 VDC. 2-way cock, full bore, for neutral gases and liquids.
Reversible electric rotary actuator.

Item

Identification	DN	Thread	A (mm)	B (mm)	D (mm)	L (mm)	AF (mm)
K- 07 30 20 64	15	Rp 1/2	152,0	189,0	17,0	75,0	26
K- 07 30 20 65	20	Rp 3/4	152,0	192,0	20,0	80,0	32
K- 07 30 20 66	25	Rp 1	152,0	195,0	25,0	90,0	41
K- 07 30 20 67	32	Rp 1 1/4	152,0	206,0	30,0	110,0	50
K- 07 30 20 68	40	Rp 1 1/2	152,0	213,0	36,0	120,0	55
K- 07 30 20 69	50	Rp 2	152,0	224,0	45,0	140,0	70

Despite careful checking, we cannot guarantee the accuracy of all information included on this site, and we accept no liability.