ND GRIFF
Handle for ND ball valve

Properties

suitable for	Low pressure ball valve
Material	Steel



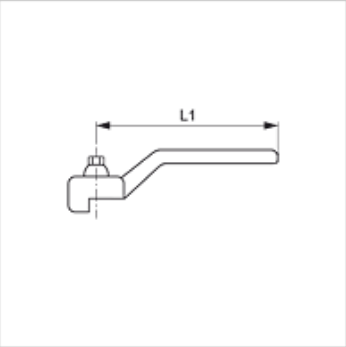

Item

Identification	for ball valve	L1 (mm)
ND GRIFF DN 06 13	DN 06 - 12	80,0
ND GRIFF DN 20 25	DN 19 / DN 25	113,0
ND GRIFF DN 32 40	DN 31 / DN 38	137,5
ND GRIFF DN 50	DN 51	157,0
ND GRIFF DN 65	DN 65	197,0
ND GRIFF DN 100	DN 76 - DN 100	250,0

DN = Nominal diameter, nominal width

Spare part for following products

BKR ND	2-way ball valve in low pressure design
3 BKR ND T	3-way ball valve in low pressure design
3 BKR ND L	3-way ball valve in low pressure design
BKR HR ND	2-way ball valve in low pressure design
BKR ND ROV	2-way ball valve in low pressure design

Despite careful checking, we cannot guarantee the accuracy of all information included on this site, and we accept no liability.