K-3WSV ELKT HANSA PRO

3/2-way poppet valve, electrically actuated, for HANSA PRO

Properties

Media temperature	-10 °C to +50 °C
Ambient temperature	-10 °C to +50 °C
Media	Compressed air
Protection IP	IP 65 acc. to DIN 40050
Mounting type	Line mounting, mounting kit or wall mounting
Operation	electrical
Pressure range	2 - 10 bar
Installation position	Any
Nominal flow-rate G1/2	5.200 l/min (P1 = 6 bar/Delta P = 1 bar)
Nominal flow-rate G 3/8	4.300 l/min (P1 = 6 bar/Delta P = 1 bar)
PE max 11	10 bar
Housing	PA66



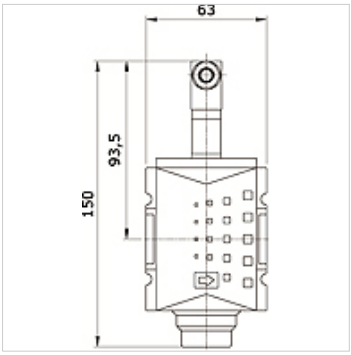

Item

Identification	Connection	Rated voltage/ current type	Size
K- 07 25 22 48	G 3/8 i	24 V DC	2
K- 07 25 22 49	G 3/8 i	115 V AC 50 Hz	2
K- 07 25 22 50	G 3/8 i	230 V AC 50 Hz	2
K- 07 25 22 51	G 1/2 i	24 V DC	2
K- 07 25 22 52	G 1/2 i	115 V AC 50 Hz	2
K- 07 25 22 53	G 1/2 i	230 V AC 50 Hz	2

Despite careful checking, we cannot guarantee the accuracy of all information included on this site, and we accept no liability.