HK B5 230/400V IE3

Electric motor B5 230/400V IE3

Properties

Design	type B5 without feet
Protection IP	IP 55
Ambient temperature	-20 °C to +40 °C
Material	Housing: Aluminium



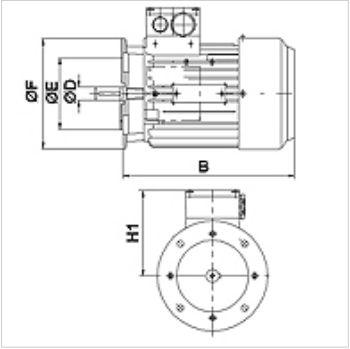

Description

Self-cooling squirrel-cage energy-saving motors
High efficiency IE3 - IEC60034-30:2009
Rated voltage 230/400V 50Hz, 460V 60Hz; 4-pin
Voltage tolerance +- 5%

Item

Identification	n 50 Hz (rpm)	n 60 Hz (rpm)	P 50 Hz (kW)	P 60 Hz (kW)	I 50 Hz (A)	LF 50 Hz	H1 (mm)	B (mm)	C (mm)	Ø D shaft (mm)	Ø E (mm)	Ø F (mm)	η (IE3) %	Weight (kg)
HK 80M4 B5 2-4 IE3	1450	1755	0,75	0,86	3,04	0,75	227	287	201	19	130	200	82,5	13,5
HK 90S4 B5 2-4 IE3	1440	1740	1,10	1,30	4,17	0,79	207	297	216	24	130	200	84,1	12,5
HK 90L4 B5 2-4 IE3	1445	1745	1,50	1,75	5,48	0,80	207	297	216	24	130	200	85,3	15,5
HK 100LA4 B5 2-4 IE3	1465	1765	2,20	2,55	7,65	0,83	271	371	266	28	215	250	86,7	26,5
HK 100LB4 B5 2-4 IE3	1460	1760	3,00	3,45	10,30	0,83	271	371	266	28	215	250	87,7	29,5

P 50 Hz = nominal output at 400 V/50 Hz – P 60 Hz = nominal output at 400 V/60 Hz – n 50 Hz = nominal speed at 400 V/50 Hz – n 60 Hz = nominal speed at 400 V/60 Hz – I 50 Hz = nominal current at 400 V/50 Hz – LF 50 Hz = cos phi power factor at 50 Hz – η (IE3) = efficiency to IE3 in % (at full load)

Despite careful checking, we cannot guarantee the accuracy of all information included on this site, and we accept no liability.