# G HB IN VA
Tubuladura hembra

HANSA-FLEX

## Características

| | |
|---|---|
| **Conexión 1** | Roscas exteriores BSP cilíndricas |
| **Forma de obturación 1** | Cono interior de 60° |
| **Conexión 2** | Roscas interiores NPT |
| **Forma de obturación 2** | obturación de rosca |
| **Construcción** | Tubuladura hembra |
| **Forma constructiva** | recto |
| **Material** | Acero fino |

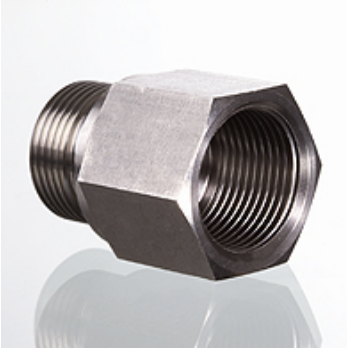

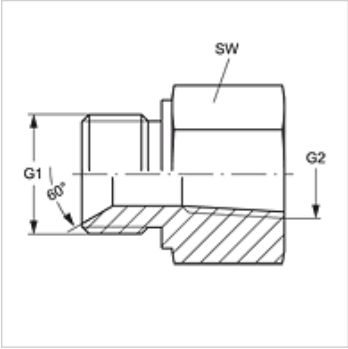


## Artículo

| Denominación | G1 | G2 | SW (mm) |
|---|---|---|---|
| **G HB 02 IN VA** | G 1/8" -28 | 1/8" -27 NPT | 14 |
| **G HB 02 IN 04 VA** | G 1/8" -28 | 1/4" -18 NPT | 19 |
| **G HB 04 IN 02 VA** | G 1/4" -19 | 1/8" -27 NPT | 19 |
| **G HB 04 IN VA** | G 1/4" -19 | 1/4" -18 NPT | 19 |
| **G HB 04 IN 06 VA** | G 1/4" -19 | 3/8" -18 NPT | 24 |
| **G HB 04 IN 08 VA** | G 1/4" -19 | 1/2" -14 NPT | 27 |
| **G HB 06 IN 04 VA** | G 3/8" -19 | 1/4" -18 NPT | 22 |
| **G HB 06 IN VA** | G 3/8" -19 | 3/8" -18 NPT | 24 |
| **G HB 06 IN 08 VA** | G 3/8" -19 | 1/2" -14 NPT | 27 |
| **G HB 08 IN 04 VA** | G 1/2" -14 | 1/4" -18 NPT | 27 |
| **G HB 08 IN 06 VA** | G 1/2" -14 | 3/8" -18 NPT | 27 |
| **G HB 08 IN VA** | G 1/2" -14 | 1/2" -14 NPT | 27 |
| **G HB 08 IN 12 VA** | G 1/2" -14 | 3/4" -14 NPT | 36 |
| **G HB 12 IN 06 VA** | G 3/4" -14 | 3/8" -18 NPT | 32 |
| **G HB 12 IN 08 VA** | G 3/4" -14 | 1/2" -14 NPT | 32 |
| **G HB 12 IN VA** | G 3/4" -14 | 3/4" -14 NPT | 36 |
| **G HB 12 IN 16 VA** | G 3/4" -14 | 1" -11,5 NPT | 36 |
| **G HB 16 IN 08 VA** | G 1" -11 | 1/2" -14 NPT | 41 |
| **G HB 16 IN 12 VA** | G 1" -11 | 3/4" -14 NPT | 41 |
| **G HB 16 IN VA** | G 1" -11 | 1" -11,5 NPT | 41 |
| **G HB 20 IN 16 VA** | G 1.1/4" -11 | 1" -11,5 NPT | 50 |
| **G HB 20 IN VA** | G 1.1/4" -11 | 1.1/4" -11,5 NPT | 50 |
| **G HB 24 IN VA** | G 1.1/2" -11 | 1.1/2" -11,5 NPT | 55 |
| **G HB 32 IN VA** | G 2" -11 | 2" -11,5 NPT | 60 |

SW = ancho de llave

## Variantes de producto

| | |
|---|---|
| **G HB IN** | Tubuladura hembra, Acero |

*Hemos revisado cuidadosamente esta publicación, pero no obstante no podemos excluir los errores y no garantizamos los datos que constan aquí.*