K-BKR STANDARD ZWEITEILIG VA

Ball valves

Características

Presión de servicio	max. 70 bar (depending on temperature and nominal size)
1.1/4" to 1.1/2"	20 °C: 70 bar, 60 °C: 55 bar, 100 °C: 35 bar, 150 °C: 6 bar, 180 °C: 4 bar, 200 °C: 0 bar
1/4" bis 1"	20 °C: 70 bar, 60 °C: 65 bar, 100 °C: 45 bar, 150 °C: 7 bar, 180 °C: 4 bar, 200 °C: 0 bar
2"	20 °C: 60 bar, 60 °C: 40 bar, 100 °C: 30 bar, 150 °C: 5 bar, 180 °C: 4 bar, 200 °C: 0 bar
Temperatura de servicio	200 °C at 0 bar
Obturac.	15 % RPTFE (glass fibre reinforced PTFE)
Palanca manual	Stainless steel 1.4301



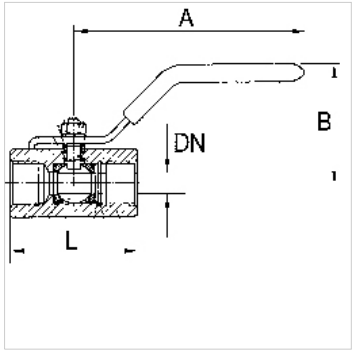

Nota

G thread acc. to DIN EN ISO 228-1, with ISO flange plate (acc. to ISO 5211)
Otras especificaciones a petición.

Descripción

Full bore

Indicaciones para pedidos

For use on devices that have to be vented whenever they are turned off, either because of safety regulations or for technical reasons. The pneumatic devices are disconnected from the system and simultaneously vented each time they are shut off.

Información adicional

G thread acc. DIN EN ISO 228-1

Artículo

Denominación	DN	Rosca	A (mm)	B (mm)	L (mm)	Material
K- 07 30 00 01	8	G 1/4	102,0	56,0	52,0	Stainless steel 1.4401/1.4408
K- 07 30 00 02	10	G 3/8	102,0	56,0	52,0	Stainless steel 1.4401/1.4408
K- 07 30 00 03	15	G 1/2	123,0	65,0	58,0	Stainless steel 1.4401/1.4408
K- 07 30 00 04	20	G 3/4	123,0	68,0	67,0	Stainless steel 1.4401/1.4408
K- 07 30 00 05	25	G 1	153,0	79,0	78,0	Stainless steel 1.4401/1.4408
K- 07 30 00 06	32	G 1 1/4	153,0	84,0	90,0	Stainless steel 1.4401/1.4408
K- 07 30 00 07	40	G 1 1/2	183,0	93,0	104,0	Stainless steel 1.4401/1.4408
K- 07 30 00 08	50	G 2	183,0	99,0	127,0	Stainless steel 1.4401/1.4408

Hemos revisado cuidadosamente esta publicación, pero no obstante no podemos excluir los errores y no garantizamos los datos que constan aquí.