K-ABBLV 2

Blow-off safety valves G 1/4

Características

Presión de servicio	0.5 - 60 bar
Temperatura de servicio	max. 180 °C
Juntas	FKM
Carcasa	Brass



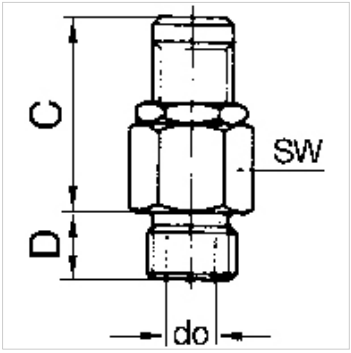

Nota

G thread acc. to DIN EN ISO 228-1, with ISO flange plate (acc. to ISO 5211)
Otras especificaciones a petición.

Descripción

Manual adjustment of the blow-off pressure (lock nut).

Indicaciones para pedidos

For use on devices that have to be vented whenever they are turned off, either because of safety regulations or for technical reasons. The pneumatic devices are disconnected from the system and simultaneously vented each time they are shut off.

Información adicional

These blow-off valves can also be supplied with a fixed setting and a TÜV type test number. Please ask for an offer.

Artículo

Denominación	Rosca	Presión de reacción	Potencia de soplado	C (mm)	D (mm)	do (mm)	SW (mm)
K- 07 30 29 18	G 1/4	0.5 - 1.0 bar	to 50 l/min	27,0	7,0	3,0	16
K- 07 30 21 95	G 1/4	1.0 - 4.0 bar	to 200 l/min	27,0	7,0	3,0	16
K- 07 30 21 96	G 1/4	3.0 - 7.0 bar	to 350 l/min	27,0	7,0	3,0	16
K- 07 30 21 97	G 1/4	6.0 - 12.0 bar	to 650 l/min	27,0	7,0	3,0	16
K- 07 30 21 98	G 1/4	10.0 - 18.0 bar	to 870 l/min	27,0	7,0	3,0	16
K- 07 30 21 99	G 1/4	16.0 - 32.0 bar	to 1600 l/min	27,0	7,0	3,0	16
K- 07 30 22 00	G 1/4	30.0 - 60.0 bar	to 3000 l/min	27,0	7,0	3,0	16

Hemos revisado cuidadosamente esta publicación, pero no obstante no podemos excluir los errores y no garantizamos los datos que constan aquí.