K-FI SPEZI METALLBEHAEL M STANDAD

Special filters with metal bowl and manual drain valve

Características

Presión de entrada	Max. 16 bar (polycarbonate bowl / bowl guard), Max. 25 bar (metal bowl)
Temper. de medios	max. 50 °C
Temp. entorno	Max. 50 °C
Efectividad	99.999 %
Ancho de poros en elemento filtrante	0.01 µm
Carcasa	Die-cast zinc, painted silver
Medic. valor de flujo	At P2 = 6 bar and pressure drop Δp = 1 bar



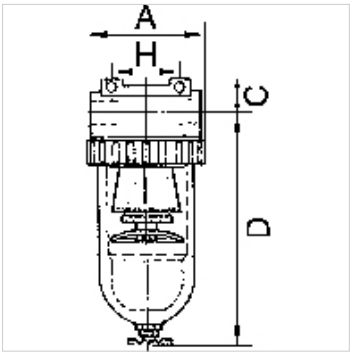

Nota

Otras especificaciones a petición.

Descripción

For all applications with particularly strict compressed air purity requirements. The separating efficiency of these filters permits very fine oil vapour particles and micro-fine suspended particles to be filtered. A standard filter should always be connected upstream to trap coarse impurities and protect the micro-filter inserts.

Artículo

Denominación	Rosca	Flujo de paso (L/min)	A (mm)	C (mm)	D (mm)	H (mm)	DN
K- 07 25 10 74	G 1/4	380	48,0	14,0	133,5	38,0	6
K- 07 25 10 77	G 3/8	380	48,0	14,0	133,5	38,0	6
K- 07 25 10 79	G 3/8	720	70,0	16,0	159,0	50,0	10
K- 07 25 10 81	G 1/2	1250	79,0	18,0	171,0	50,0	15
K- 07 25 10 84	G 3/4	7000	133,0	36,0	206,0	134,0	20
K- 07 25 10 87	G 1	7000	133,0	36,0	206,0	120,0	25

Piezas de repuesto

K-HALTERBAUSATZ STANDARD	Holder
K-FILTERELEMENT STANDARD	Filter element
K-SCHUTZKORB G	Protective cage
K-XV AGM MS NI	Double nipples, parallel male thread, nickel-plated brass
K-LOESBARE DOPPELNIPPEL MS	Double nipples

Hemos revisado cuidadosamente esta publicación, pero no obstante no podemos excluir los errores y no garantizamos los datos que constan aquí.