K-WKV 3/2 SCHLS STECK

3/2-way toggle valves, discharge port on thread, plug-in connector

Características

Presión de servicio	máx. 8 bares
Rango de temperatura	0 °C to +70 °C
Rosca de panel de control	M 12 x 0.75 (sheet thickness max. 4 mm)
Piezas int.	Brass with a bare metal surface
Material obturador	NBR
Tornillo hueco, brazo gir., palanca bascul.	Nickel-plated brass
Juntas (imperdibles)	Polyamide (glass fibre-reinforced)



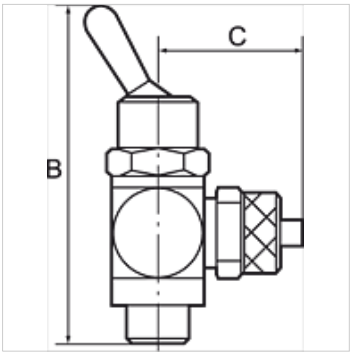

Nota

Otras especificaciones a petición.

Descripción

Manually operated toggle valves, 2/2 and 3/2-way types. For all applications where compressed air must be switched on or off quickly and easily or a cylinder operated manually. Designed as a banjo-type valve with a hollow bolt and ring piece. Suitable for screwing directly into the equipment or for panel mounting. Compact type of construction, also ideal where space is restricted.

Artículo

Denominación	Versión	C (mm)	para tubo flexible	Rosca	SW	B (mm)
K- 07 15 07 31	3/2-way	19,5	4 mm	G 1/8	14 mm	55,0
K- 07 15 07 32	3/2-way	22,0	6 mm	G 1/8	14 mm	55,0
K- 07 15 07 33	3/2-way	22,5	8 mm	G 1/8	14 mm	55,0
K- 07 15 07 29	3/2-way	23,5	6 mm	G 1/4	17 mm	60,0
K- 07 15 07 30	3/2-way	24,0	8 mm	G 1/4	17 mm	60,0
K- 07 15 07 28	3/2-way	26,5	10 mm	G 1/4	17 mm	60,0

Hemos revisado cuidadosamente esta publicación, pero no obstante no podemos excluir los errores y no garantizamos los datos que constan aquí.