# K-KDR SCHNVERSCHR

Mini pressure regulators, discharge port on thread, quick-lock screw fitting

## Características

| | |
|---|---|
| **Rango de regulación** | 0 - 8 bar |
| **Presión de entrada** | Max. 10 bar |
| **Rango de temperatura** | 0 °C to +70 °C |
| **Tornillo hueco, brazo gir., torn. regulador** | Nickel-plated brass |
| **Piezas int.** | Brass with a bare metal surface |
| **Junta labial anillo tórico** | NBR |
| **Juntas (imperdibles)** | Polyamide (glass fibre-reinforced) |



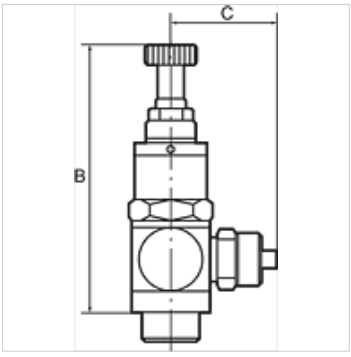


## Nota

Otras especificaciones a petición.

## Descripción

Piston pressure regulator with self-relieving design, hollow bolt and pivoting ring piece. The regulator is screwed directly into the consumer (e.g. cylinder, handling equipment, etc.). The working pressure can thus be adapted to the specific application.

## Artículo

| Denominación | C (mm) | para tubo flexible | Rosca | SW | B (mm) |
|---|---|---|---|---|---|
| **K- 07 25 08 33** | 16,0 | G 1/8 IG | G 1/8 | 15 mm | 56,0 |
| **K- 07 25 08 34** | 25,0 | 5 mm / 3 mm | G 1/8 | 15 mm | 56,0 |
| **K- 07 25 08 35** | 25,0 | 6 mm / 4 mm | G 1/8 | 15 mm | 56,0 |
| **K- 07 25 08 36** | 25,0 | 8 mm / 6 mm | G 1/8 | 15 mm | 56,0 |
| **K- 07 25 08 31** | 26,5 | 6 mm / 4 mm | G 1/4 | 17 mm | 63,0 |
| **K- 07 25 08 32** | 27,5 | 8 mm / 6 mm | G 1/4 | 17 mm | 63,0 |
| **K- 07 25 08 30** | 28,5 | 10 mm / 8 mm | G 1/4 | 17 mm | 63,0 |

*Hemos revisado cuidadosamente esta publicación, pero no obstante no podemos excluir los errores y no garantizamos los datos que constan aquí.*