K-STOPPVENTILE STECK

Stop valves, ports 2 and 3 with plug connection

Características

Presión de funcionamiento	Max. 10 bar
Presión de control	1 - 5 bar, depending on operating pressure
Temper. de medios	max. 70 °C
Posición de instalación	Any. Ring pieces can still be rotated 360° after the valve has been tightened
Material obturador	Perbunan



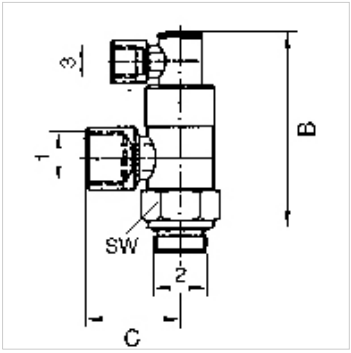

Nota

Otras especificaciones a petición.

Descripción

For high-speed positioning and stop functions as well as emergency switching (e.g. emergency stop). If a control signal is present at port 3, air can flow to and from the cylinder. If no control signal is present, the air flow to and from the cylinder is shut off, causing the cylinder to stop in the required position. Stop valves are screwed directly onto the cylinder instead of the normal pipe connections.

Artículo

Denominación	Port 1	Port 2	Conexión 3	Material	B (mm)	C (mm)
K- 07 15 20 50	G 1/8	6 mm	4 mm	Nickel-plated brass	52,0	25,0
K- 07 15 20 49	G 1/4	6 mm	4 mm	Nickel-plated brass	58,0	28,0
K- 07 15 20 51	G 3/8	8 mm	4 mm	Nickel-plated brass	63,0	32,0
K- 07 15 20 48	G 1/2	12 mm	4 mm	Nickel-plated brass	72,0	41,0

Hemos revisado cuidadosamente esta publicación, pero no obstante no podemos excluir los errores y no garantizamos los datos que constan aquí.