# K-BKR KL SERIE 374

Ball valves, 374 series

## Características

| | |
|---|---|
| **Presión de servicio** | max. 70 bar (Depending on Temperature) |
| **Temperatura de servicio** | Max. 150 °C |
| **Obturac.** | PTFE |
| **Palanca manual** | Stainless steel 1.4301 |



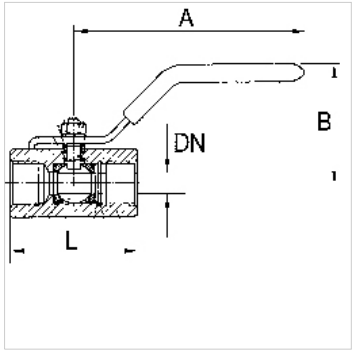


## Nota

G thread acc. to DIN EN ISO 228-1, with ISO flange plate (acc. to ISO 5211)
Otras especificaciones a petición.

## Indicaciones para pedidos

For use on devices that have to be vented whenever they are turned off, either because of safety regulations or for technical reasons. The pneumatic devices are disconnected from the system and simultaneously vented each time they are shut off.

## Información adicional

G thread acc. DIN EN ISO 228-1

## Artículo

| Denominación | DN | Rosca | A (mm) | B (mm) | L (mm) | Material |
|---|---|---|---|---|---|---|
| **K- 07 30 15 32** | 5 | G 1/4 | 62,0 | 30,0 | 47,0 | Stainless steel 1.4401/1.4408 |
| **K- 07 30 15 33** | 7 | G 3/8 | 82,0 | 30,0 | 51,0 | Stainless steel 1.4401/1.4408 |
| **K- 07 30 15 34** | 9 | G 1/2 | 92,0 | 45,0 | 64,0 | Stainless steel 1.4401/1.4408 |
| **K- 07 30 15 35** | 13 | G 3/4 | 94,0 | 50,0 | 68,0 | Stainless steel 1.4401/1.4408 |

*Hemos revisado cuidadosamente esta publicación, pero no obstante no podemos excluir los errores y no garantizamos los datos que constan aquí.*