K-WTST SAFETY BKR SCHA AN FILR MULT

SAFETY service unit sets, comprising a ball valve with silencer, start-up valve and filter regulator with lock cylinder

Características

Presión de entrada	2 - 16 bar
Presión inicial	0.5 - 10 bar
Rango de temperatura	Max. 60 °C
Medios	aire comprimido
Material obturador	NBR
Depósito	Polycarbonate (with bayonet lock) and bowl guard
Caperuza elást.	POM
Elem.filtro	Cellpor (PE) 5 µm
Carcasa	Die-cast zinc
Membrana	NBR
Drain valve	Semi-automatic
Medic. valor de flujo	At P1 = 8 bar, P2 = 6 bar and pressure drop Δp = 1 bar
Otras especif.	see data sheets of the individual components (on request)
Conex. aireac. Ll. bola	Silencer



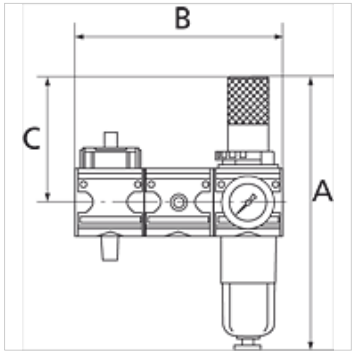

Descripción

These compressed air service unit sets, comprising a ball valve with silencer, a start-up valve and one out of a pressure regulator, filter regulator or service unit, meet even the strictest requirements for operating reliability and accident prevention!

Indicaciones para pedidos

The price does not include a padlock. Please order separately. For accessories and spare parts, refer to individual components: ball valve, start-up valve, pressure regulator, filter regulator, 2-piece service unit.

Artículo

Denominación	Rosca	Flujo de paso (L/min)	A (mm)	B	C (mm)	Salida de condensado
K- 07 25 15 14	G 1/4	1000	219,1	137,8 mm	94,0	Semi-automatic
K- 07 25 15 15	G 1/2	4000	269,3	200,8 mm	122,0	Semi-automatic
K- 07 25 15 16	G 1	12000	410,8	282,8 mm	157,0	Semi-automatic

Hemos revisado cuidadosamente esta publicación, pero no obstante no podemos excluir los errores y no garantizamos los datos que constan aquí.