# K-ZFL ABSP-KLAPPEN EINFACH

Butterfly valves, with single-acting actuator - spring to close, min. pilot pressure 5 bar

## Características

| | |
|---|---|
| **Construcción** | Pneumatic actuators, in double- or single acting version |
| **Presión de servicio** | Max. 16 bar |
| **Temperatura de servicio** | -15 °C to +120 °C |
| **Medios** | Water / steam, salt water, salt water, ester, ketone, alkali, caustic soda, sodium hydroxide. Not recommended for hydrocarbons |
| **Presión de control** | 5.5 bar |
| **Adaptador válv.** | Supplied as standard, operated by a 3/2- or 5/2-way valve |
| **Áng. giro** | 90 ° |
| **Accion.** | aluminium eloxed |
| **Obt. de accionam.** | NBR |
| **Carcasa** | Grey cast iron GG25 epoxy resin coated, RAL 5015 |
| **Obturac.** | EPDM |
| **Eje** | SS416 |
| **Retén del eje** | EPDM |
| **Control** | |



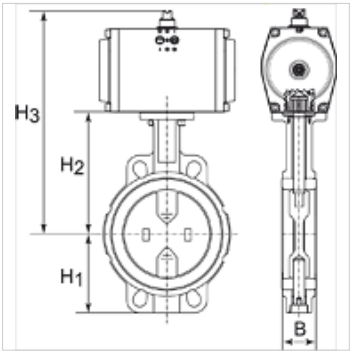


## Nota

Otras especificaciones a petición.

## Artículo

| Denominación | Disco | DN | B (mm) | H1 (mm) | H2 (mm) | H3 (mm) | L (mm) |
|---|---|---|---|---|---|---|---|
| **K- 07 30 03 36** | Stainless Steel CF8M/1.4404 | 40 | 38,0 | 68,0 | 108,0 | 238,0 | 94,0 |
| **K- 07 30 03 37** | Stainless Steel CF8M/1.4404 | 50 | 47,0 | 71,0 | 143,0 | 273,0 | 100,0 |
| **K- 07 30 03 38** | Stainless Steel CF8M/1.4404 | 65 | 49,0 | 78,0 | 155,0 | 285,0 | 115,0 |
| **K- 07 30 03 39** | Stainless Steel CF8M/1.4404 | 80 | 47,0 | 89,0 | 162,0 | 292,0 | 127,0 |
| **K- 07 30 03 40** | Stainless Steel CF8M/1.4404 | 100 | 56,0 | 102,0 | 178,0 | 348,0 | 163,0 |
| **K- 07 30 03 42** | Stainless Steel CF8M/1.4404 | 125 | 59,0 | 123,0 | 191,0 | 361,0 | 190,0 |
| **K- 07 30 03 44** | Stainless Steel CF8M/1.4404 | 150 | 59,0 | 138,0 | 265,0 | 395,0 | 216,0 |

*Hemos revisado cuidadosamente esta publicación, pero no obstante no podemos excluir los errores y no garantizamos los datos que constan aquí.*