# K-WTEH 3-TLG MET SICH WAND V G

Service units, 3-piece with metal bowl, sight glass and joiner for wall mounting, fully-automatic drain valve

HANSA FLEX

## Características

| | |
|---|---|
| **Presión de entrada** | Max. 10 bar |
| **Temper. de medios** | max. 70 °C |
| **Temp. entorno** | Max. 70 °C |
| **Ancho de poros en elemento filtrante** | 5 µm |
| **Material obturador** | NBR |
| **Caperuza elást.** | POM |
| **Carcasa** | Die-cast aluminium |
| **Suplem. de goteo** | Brass/POM |
| **Drain valve** | Semi- or fully-automatic |
| **Medic. valor de flujo** | At P1 = 8 bar, P2 = 6 bar and pressure drop Δp = 1 bar |
| **Otras especif.** | User manual on request |



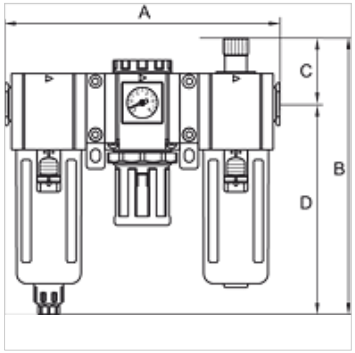


## Artículo

| Denominación | Rosca | Rango de regulación | Flujo de paso (L/min) | A (mm) | B | C (mm) | D (mm) | Tamaño constructivo |
|---|---|---|---|---|---|---|---|---|
| **K- 07 25 14 32** | G 3/4 | 1.5 - 9 bar | 3750 | 295,0 | 280,5 mm | 61,5 | 219,0 | 600 |
| **K- 07 25 14 34** | G 1 | 1.5 - 9 bar | 3750 | 295,0 | 280,5 mm | 61,5 | 219,0 | 600 |

## Accesorios

| | |
|---|---|
| **K-VERSCHLEI-SATZ** | Set of wearing parts |
| **K-ERSATZMEMBRANE** | Replacement diaphragm |
| **K-ADAPTERPLATTEN HANSA** | Adapter plate HANSA |
| **K-FILTERELEMENT** | Filter element |
| **K-ERSATZBEHAELTER G UND G-MINI POLY** | Spare tanks »G« Series and »G-mini« Series Polycarbonat |
| **K-VERBINDUNGELEMENTE** | Connecting sets |
| **K-WANDHALTER** | Wall bracket |

*Hemos revisado cuidadosamente esta publicación, pero no obstante no podemos excluir los errores y no garantizamos los datos que constan aquí.*