K-WTEH 2-TLG PC SCHU VARIOBLOC

Service units, 2-piece with polycarbonate bowl and bowl guard

Características

Presión de entrada	Max. 16 bar (polycarbonate bowl), Max. 20 bar (metal bowl)
Temper. de medios	max. 50 °C
Temp. entorno	Max. 50 °C (polycarbonate bowl), Max. 80 °C (metal bowl)
Ancho de poros en elemento filtrante	40 µm
Material obturador	NBR
Caperuza elást.	POM
Carcasa	Die-cast zinc
Membrana	NBR
Suplem. de goteo	PA
Drain valve	Manual
Medic. valor de flujo	At P1 = 10 bar, P2 = 6 bar and pressure drop Δp = 1 bar



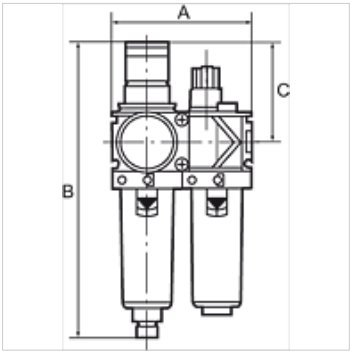

Nota

Otras especificaciones a petición.

Descripción

Two or three-piece service units consisting of a reversible diaphragm pressure regulator, independent of inlet pressure, with self-relieving design, combined with a centrifugal separator and a proportional lubricator. Approved series in modern industrial design, with the following key benefits: Simple handling, Convenient modular assembly thanks to innovative fasteners, Excellent flow values.

Indicaciones para pedidos

Service units are also available with bowl guard or metal bowl. Service units are also available in other control ranges (0.5 - 6 bar and 0.5 - 16 bar) and in lockable version. Please ask for more information.

Información adicional

Service units are also available with bowl guard or metal bowl. Service units are also available in other control ranges.

Artículo

Denominación	Rosca	Rango de regulación	Flujo de paso (L/min)	A (mm)	B	C (mm)
K- 07 25 22 81	G 1/4	0.5 - 10 bar	1500	96,0	203,0 mm	68,0
K- 07 25 22 80	G 3/8	0.5 - 10 bar	1800	96,0	203,0 mm	68,0
K- 07 25 22 79	G 1/2	0.5 - 10 bar	3400	140,0	273,0 mm	98,0
K- 07 25 22 78	G 3/4	0.5 - 10 bar	5000	140,0	273,0 mm	98,0
K- 07 25 22 77	G 1	0.5 - 10 bar	5000	194,0	273,0 mm	98,0

Hemos revisado cuidadosamente esta publicación, pero no obstante no podemos excluir los errores y no garantizamos los datos que constan aquí.