RIL ED
Üleminek, pikk

HANSA-FLEX

Omadused

Ühendus 1	BSP-väliskeere, silindriline
Tihenditüüp 1	E-vorm
Ühendus 2	BSP-sisekeere, silindriline
Tüüp	Üleminek
Ehitustüüp	Pikk
Materjal	Teras
Pinnatöötlus	galvaniseeritud



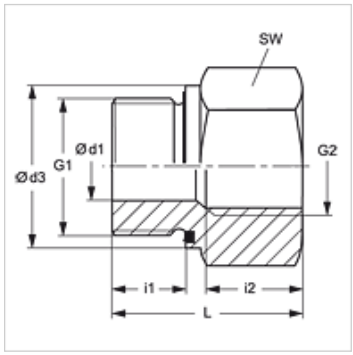

Vihje

Viiteid monteerimise, paigaldamise, survetugevuse ja lubatud töötemperatuuride kohta leiate toruühenduste tehnilisest juhendist.

Artikkel

Märgistus	Tööröhk bar	Ø d1 (mm)	G1	G2	Ø d3 (mm)	i1 (mm)	i2 (mm)	L (mm)	SW (mm)
RIL NW 03 06 ED	PN 400	4	G 1/8" -28	G 1/4" -19	13,9	8	17,0	31,0	19
RIL NW 03 10 ED	PN 400	4	G 1/8" -28	G 3/8" -19	13,9	8	17,0	32,0	24
RIL NW 06 03 ED	PN 400	5	G 1/4" -19	G 1/8" -28	18,9	12	12,0	28,0	19
RIL NW 06 10 ED	PN 400	5	G 1/4" -19	G 3/8" -19	18,9	12	17,0	36,0	24
RIL NW 06 13 ED	PN 400	5	G 1/4" -19	G 1/2" -14	18,9	12	20,0	40,0	27
RIL NW 06 20 ED	PN 400	5	G 1/4" -19	G 3/4" -14	18,9	12	22,0	43,0	36
RIL NW 10 06 ED	PN 400	8	G 3/8" -19	G 1/4" -19	21,9	12	17,0	36,0	22
RIL NW 10 13 ED	PN 400	8	G 3/8" -19	G 1/2" -14	21,9	12	20,0	41,0	27
RIL NW 10 20 ED	PN 315	8	G 3/8" -19	G 3/4" -14	21,9	12	22,0	44,0	36
RIL NW 13 10 ED	PN 400	12	G 1/2" -14	G 3/8" -19	26,9	14	17,0	36,0	27
RIL NW 13 20 ED	PN 315	12	G 1/2" -14	G 3/4" -14	26,9	14	22,0	46,0	36
RIL NW 13 25 ED	PN 315	12	G 1/2" -14	G 1" -11	26,9	14	24,5	49,0	41
RIL NW 13 32 ED	PN 315	10	G 1/2" -14	G 1.1/4" -11	26,9	14	26,5	53,0	55
RIL NW 20 13 ED	PN 315	16	G 3/4" -14	G 1/2" -14	31,9	16	20,0	41,0	32
RIL NW 20 25 ED	PN 315	16	G 3/4" -14	G 1" -11	31,9	16	24,5	51,0	41
RIL NW 20 32 ED	PN 315	16	G 3/4" -14	G 1.1/4" -11	31,9	16	26,5	55,0	55
RIL NW 20 40 ED	PN 250	16	G 3/4" -14	G 1.1/2" -11	31,9	16	28,5	57,0	60
RIL NW 25 20 ED	PN 315	20	G 1" -11	G 3/4" -14	39,9	18	22,0	47,0	41
RIL NW 25 32 ED	PN 315	20	G 1" -11	G 1.1/4" -11	39,9	18	26,5	57,0	55
RIL NW 25 40 ED	PN 250	20	G 1" -11	G 1.1/2" -11	39,9	18	28,5	59,0	60
RIL NW 32 25 ED	PN 315	25	G 1.1/4" -11	G 1" -11	49,9	20	24,5	52,0	50
RIL NW 32 40 ED	PN 250	25	G 1.1/4" -11	G 1.1/2" -11	49,9	20	28,5	60,0	60
RIL NW 40 32 ED	PN 250	32	G 1.1/2" -11	G 1.1/4" -11	54,9	22	26,5	58,0	55
RIL NW 50 40 ED	PN 160	40	G 2" -11	G 1.1/2" -11	69,9	24	28,5	65,5	70

PN = nimirõhk PB = maks. tööröhk

Toote variandid

RIL ED VA	Üleminek, pikk, Roostevaba teras

Varuosad

WD	Pehme tihend ED-liitmikule

Vaatamata põhjalikule kontrollile ei saa me vigade esinemist välistada ning ei vastuta olemasolevate andmete eest.