GE HB HN

Sissekeeratav liitmik

HANSA-FLEX

Omadused

Ühendus 1	BSP-väliskeere, silindriline
Tihenditüüp 1	60° sisekoonus
Ühendus 2	NPT-väliskeere
Tihenditüüp 2	keermestihend
Tüüp	Sissekeeratav liitmik
Ehitustüüp	Sirge
Materjal	Teras
Pinnatöötlus	galvaniseeritud



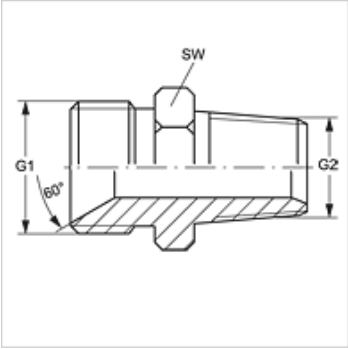

Artikkel

Märgistus	G1	G2	SW (mm)
GE HB 02 HN	G 1/8" -28	1/8" -27 NPT	11
GE HB 02 HN 04	G 1/8" -28	1/4" -18 NPT	17
GE HB 04 HN 02	G 1/4" -19	1/8" -27 NPT	17
GE HB 04 HN	G 1/4" -19	1/4" -18 NPT	17
GE HB 04 HN 06	G 1/4" -19	3/8" -18 NPT	17
GE HB 04 HN 08	G 1/4" -19	1/2" -14 NPT	22
GE HB 04 HN 12	G 1/4" -19	3/4" -14 NPT	27
GE HB 06 HN 02	G 3/8" -19	1/8" -27 NPT	17
GE HB 06 HN 04	G 3/8" -19	1/4" -18 NPT	17
GE HB 06 HN	G 3/8" -19	3/8" -18 NPT	17
GE HB 06 HN 08	G 3/8" -19	1/2" -14 NPT	22
GE HB 06 HN 12	G 3/8" -19	3/4" -14 NPT	27
GE HB 06 HN 16	G 3/8" -19	1" -11,5 NPT	36
GE HB 08 HN 04	G 1/2" -14	1/4" -18 NPT	22
GE HB 08 HN 06	G 1/2" -14	3/8" -18 NPT	22
GE HB 08 HN	G 1/2" -14	1/2" -14 NPT	22
GE HB 08 HN 12	G 1/2" -14	3/4" -14 NPT	27
GE HB 08 HN 16	G 1/2" -14	1" -11,5 NPT	36
GE HB 10 HN 08	G 5/8" -14	1/2" -14 NPT	27
GE HB 10 HN 12	G 5/8" -14	3/4" -14 NPT	27
GE HB 12 HN 04	G 3/4" -14	1/4" -18 NPT	27
GE HB 12 HN 06	G 3/4" -14	3/8" -18 NPT	27
GE HB 12 HN 08	G 3/4" -14	1/2" -14 NPT	27
GE HB 12 HN	G 3/4" -14	3/4" -14 NPT	27
GE HB 12 HN 16	G 3/4" -14	1" -11,5 NPT	36
GE HB 12 HN 20	G 3/4" -14	1.1/4" -11,5 NPT	46
GE HB 16 HN 08	G 1" -11	1/2" -14 NPT	36
GE HB 16 HN 12	G 1" -11	3/4" -14 NPT	36
GE HB 16 HN	G 1" -11	1" -11,5 NPT	36
GE HB 16 HN 20	G 1" -11	1.1/4" -11,5 NPT	46
GE HB 16 HN 24	G 1" -11	1.1/2" -11,5 NPT	50
GE HB 16 HN 32	G 1" -11	2" -11,5 NPT	65
GE HB 20 HN 12	G 1.1/4" -11	3/4" -14 NPT	46
GE HB 20 HN 16	G 1.1/4" -11	1" -11,5 NPT	46
GE HB 20 HN	G 1.1/4" -11	1.1/4" -11,5 NPT	46
GE HB 20 HN 24	G 1.1/4" -11	1.1/2" -11,5 NPT	50
GE HB 24 HN 16	G 1.1/2" -11	1" -11,5 NPT	50
GE HB 24 HN 20	G 1.1/2" -11	1.1/4" -11,5 NPT	50
GE HB 24 HN	G 1.1/2" -11	1.1/2" -11,5 NPT	50
GE HB 24 HN 32	G 1.1/2" -11	2" -11,5 NPT	65
GE HB 32 HN 20	G 2" -11	1.1/4" -11,5 NPT	65
GE HB 32 HN 24	G 2" -11	1.1/2" -11,5 NPT	65
GE HB 32 HN	G 2" -11	2" -11,5 NPT	65

SW = võtme suurus

Toote variandid

GE HB HN VA	Sissekeeratav liitmik, Roostevaba teras

Vaatamata põhjalikule kontrollile ei saa me vigade esinemist välistada ning ei vastuta olemasolevate andmete eest.