GE HB HN VA
Sissekeeratav liitmik

Omadused

Ühendus 1	BSP-väliskeere, silindriline
Tihenditüüp 1	60° sisekoonus
Ühendus 2	NPT-väliskeere
Tihenditüüp 2	keermestihend
Tüüp	Sissekeeratav liitmik
Ehitustüüp	Sirge
Materjal	Roostevaba teras



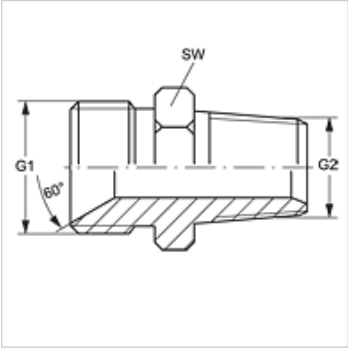

Artikkel

Märgistus	G1	G2	SW (mm)
GE HB 02 HN VA	G 1/8" -28	1/8" -27 NPT	14
GE HB 04 HN 02 VA	G 1/4" -19	1/8" -27 NPT	19
GE HB 04 HN VA	G 1/4" -19	1/4" -18 NPT	19
GE HB 04 HN 06 VA	G 1/4" -19	3/8" -18 NPT	19
GE HB 04 HN 08 VA	G 1/4" -19	1/2" -14 NPT	27
GE HB 06 HN VA	G 3/8" -19	3/8" -18 NPT	22
GE HB 06 HN 04 VA	G 3/8" -19	1/4" -18 NPT	22
GE HB 06 HN 08 VA	G 3/8" -19	1/2" -14 NPT	22
GE HB 06 HN 12 VA	G 3/8" -19	3/4" -14 NPT	27
GE HB 08 HN VA	G 1/2" -14	1/2" -14 NPT	27
GE HB 08 HN 04 VA	G 1/2" -14	1/4" -18 NPT	27
GE HB 08 HN 06 VA	G 1/2" -14	3/8" -18 NPT	27
GE HB 08 HN 12 VA	G 1/2" -14	3/4" -14 NPT	27
GE HB 12 HN VA	G 3/4" -14	3/4" -14 NPT	32
GE HB 12 HN 08 VA	G 3/4" -14	1/2" -14 NPT	32
GE HB 16 HN VA	G 1" -11	1" -11,5 NPT	41
GE HB 16 HN 12 VA	G 1" -11	3/4" -14 NPT	41
GE HB 20 HN VA	G 1.1/4" -11	1.1/4" -11,5 NPT	46
GE HB 24 HN VA	G 1.1/2" -11	1.1/2" -11,5 NPT	50
GE HB 32 HN VA	G 2" -11	2" -11,5 NPT	55

SW = võtme suurus

Toote variandid

GE HB HN	Sissekeeratav liitmik, Teras

Vaatamata põhjalikule kontrollile ei saa me vigade esinemist välistada ning ei vastuta olemasolevate andmete eest.