K-PRAEZIONSFILTERREGLER
Precision filter regulators

HANSA FLEX

Omadused

Sisendrõhk	Max. 16 bar
Aine temperatuur	max. 60 °C
Keskkonnatemperatuur	Max. 60 °C
Vahendid	Micro-filtered, unoiled compressed air (0.01 µm)
Manomeetri ühendus	G 1/4
Filterelemendi pooride suurus	10 µm
Tihendusmaterjal	NBR
Korpus	Die-cast zinc
Sisemine õhutarve	0.01 l/min, depending on input pressure and control range



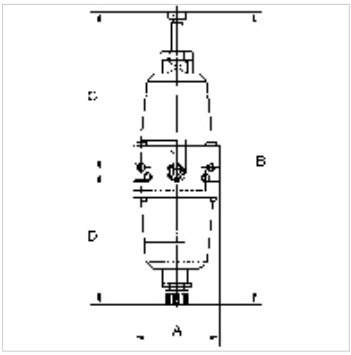

Vihje

The given flow rates are based on the following parameters: 750 l/min: P1: 8 bar, P2: 2 bar, Δp ≤ 0.2 bar
750 l/min: P1: 8 bar, P2: 3 bar, Δp ≤ 0.5 bar
750 l/min: P1: 8 bar, P2: 5 bar, Δp ≤ 0.7 bar
Lisaandmed saate soovi korral.

Kirjeldus

Diaphragm pressure regulators containing no non-ferrous metals, with selfrelieving design, combined with a centrifugal separator for applications requiring an extremely accurate working pressure.

Lisateave

1500 l/min: P1: 10 bar, P2: 7 bar, Δp ≤ 0.1 bar.

Artikkel

Märgistus	Keere	Reguleerimisvahemik	Läbivool (L/min)	A (mm)	B	C (mm)	D (mm)
K- 07 25 09 86	G 1/4	0.1 - 2 bar	750	60,0	216,0 mm	120,0	96,0
K- 07 25 09 87	G 1/4	0.1 - 3 bar	750	60,0	216,0 mm	120,0	96,0
K- 07 25 09 88	G 1/4	0.2 - 5 bar	750	60,0	216,0 mm	120,0	96,0

Varuosad

K-HALTERBAUSATZ STANDARD	Holder
K-VERSCHLEI-SATZ	Set of wearing parts

Vaatamata põhjalikule kontrollile ei saa me vigade esinemist välistada ning ei vastuta olemasolevate andmete eest.