K-DRG MULTIFIX MINI

Pressure regulators

Omadused

Sisendrõhk	Max. 16 bar
Aine temperatuur	max. 60 °C
Keskkonnatemperatuur	Max. 60 °C
Tihendusmaterjal	NBR
Vedrukate	POM-brass
Korpus	Die-cast zinc
Läbivoolu väärtuse mõõtmine	At P1 = 8 bar, P2 = 6 bar and pressure drop Δp = 1 bar



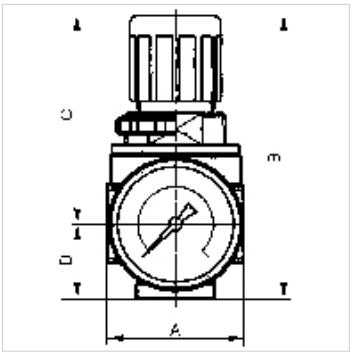

Vihje

Lisaandmed saate soovi korral.

Kirjeldus

Reversible diaphragm pressure regulators, independent of inlet pressure, with self-relieving design. The pressure setting can be locked by pushing the button down.

Tellimisinfo

Lockable pressure regulators: K-07250001 and K-07250007 (prices on request). If several devices in the »multifix-mini« Series are assembled together, the maximum working pressure is 12 bar.

Artikkel

Märgistus	Keere	Reguleerimisvahemik	Läbivool (L/min)	A (mm)	B	C (mm)	D (mm)	DN	Ehitussuurus
K- 07 25 00 03	G 1/8	0.1 - 3 bar	1100	40,0	85,0 mm	63,0	22,0	5	0
K- 07 25 00 04	G 1/8	0.2 - 6 bar	1100	40,0	85,0 mm	63,0	22,0	5	0
K- 07 25 00 01	G 1/8	0.5 - 10 bar	1100	40,0	85,0 mm	63,0	22,0	5	0
K- 07 25 00 02	G 1/8	0.5 - 16 bar	1100	40,0	85,0 mm	63,0	22,0	5	0
K- 07 25 00 05	G 1/4	0.1 - 3 bar	1100	40,0	85,0 mm	63,0	22,0	5	0
K- 07 25 00 06	G 1/4	0.2 - 6 bar	1100	40,0	85,0 mm	63,0	22,0	5	0
K- 07 25 00 07	G 1/4	0.5 - 10 bar	1100	40,0	85,0 mm	63,0	22,0	5	0

Varuosad

K-HALTERBAUSATZ	Holder
K-SCHALTTAFELMUTTER	Nut
K-KOPPELPAKET MEHR	Coupling packet
K-VERSCHLEI-SATZ	Set of wearing parts

Vaatamata põhjalikule kontrollile ei saa me vigade esinemist välistada ning ei vastuta olemasolevate andmete eest.