K-DRG SCHALTTAFELEINBAU STANDARD

Pressure regulators

HANSA-FLEX

Omadused

Sisendrõhk	Max. 16 bar K-07250359 - K-07250366), max. 25 bar (K-07250367 - K-07250378)
Aine temperatuur	max. 60 °C
Keskkonnatemperatuur	Max. 80 °C
Tihendusmaterjal	NBR
Korpus	Die-cast zinc, painted silver
Läbivoolu väärtuse mõõtmine	At P1 = 8 bar, P2 = 6 bar and pressure drop Δp = 1 bar
Muud andmed	User manual on request



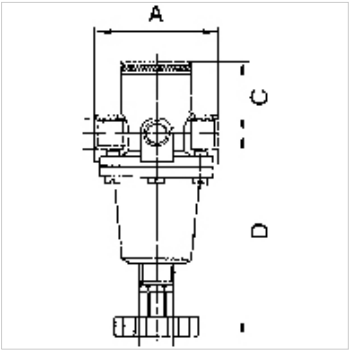

Kirjeldus

- incl. panel nut and washer -, Reversible diaphragm pressure regulators, independent of inlet pressure, with self-relieving design.

Artikkel

Märgistus	Keere	Reguleerimisvahemik	Läbivool (L/min)	A (mm)	C (mm)	D (mm)	DN	Lülitustahvli keere
K- 07 25 03 59	G 1/4	0.5 - 3 bar	1000	54,0	32,0	97,5	6	M 20 x 1.5
K- 07 25 03 60	G 1/4	0.5 - 6 bar	1000	54,0	32,0	97,5	6	M 20 x 1.5
K- 07 25 03 61	G 1/4	0.5 - 10 bar	1000	54,0	32,0	97,5	6	M 20 x 1.5
K- 07 25 03 62	G 1/4	0.5 - 16 bar	1000	54,0	32,0	97,5	6	M 20 x 1.5
K- 07 25 03 63	G 3/8	0.5 - 3 bar	1000	54,0	32,0	97,5	6	M 20 x 1.5
K- 07 25 03 64	G 3/8	0.5 - 6 bar	1000	54,0	32,0	97,5	6	M 20 x 1.5
K- 07 25 03 65	G 3/8	0.5 - 10 bar	1000	54,0	32,0	97,5	6	M 20 x 1.5
K- 07 25 03 66	G 3/8	0.5 - 16 bar	1000	54,0	32,0	97,5	6	M 20 x 1.5
K- 07 25 03 67	G 1/2	0.1 - 3 bar	2200	70,0	34,0	111,9	15	M 20 x 1.5
K- 07 25 03 68	G 1/2	0.5 - 6 bar	2200	70,0	34,0	111,9	15	M 20 x 1.5
K- 07 25 03 69	G 1/2	0.5 - 10 bar	2200	70,0	34,0	111,9	15	M 20 x 1.5
K- 07 25 03 70	G 1/2	0.5 - 16 bar	2200	70,0	34,0	111,9	15	M 20 x 1.5
K- 07 25 03 71	G 3/4	0.1 - 3 bar	5000	90,0	31,0	132,4	20	M 20 x 1.5
K- 07 25 03 72	G 3/4	0.5 - 6 bar	5000	90,0	31,0	132,4	20	M 20 x 1.5
K- 07 25 03 73	G 3/4	0.5 - 10 bar	5000	90,0	31,0	132,4	20	M 20 x 1.5
K- 07 25 03 74	G 3/4	0.5 - 16 bar	5000	90,0	31,0	132,4	20	M 20 x 1.5
K- 07 25 03 75	G 1	0.1 - 3 bar	5000	90,0	31,0	132,4	25	M 20 x 1.5
K- 07 25 03 76	G 1	0.5 - 6 bar	5000	90,0	31,0	132,4	25	M 20 x 1.5
K- 07 25 03 77	G 1	0.5 - 10 bar	5000	90,0	31,0	132,4	25	M 20 x 1.5
K- 07 25 03 78	G 1	0.5 - 16 bar	5000	90,0	31,0	132,4	25	M 20 x 1.5

Varuosad

K-HALTERBAUSATZ STANDARD	Holder
K-VERSCHLEI-SATZ	Set of wearing parts
K-LOESBARE DOPPELNIPPEL MS	Double nipples
K-XV AGM MS NI	Double nipples, parallel male thread, nickel-plated brass

Vaatamata põhjalikule kontrollile ei saa me vigade esinemist välistada ning ei vastuta olemasolevate andmete eest.