K-FI SPEZI METALLBEHAEL M STANDAD

Special filters with metal bowl and manual drain valve

Omadused

Sisendrõhk	Max. 16 bar (polycarbonate bowl / bowl guard), Max. 25 bar (metal bowl)
Aine temperatuur	max. 50 °C
Keskkonnatemperatuur	Max. 50 °C
Toime	99.999 %
Filterelemendi pooride suurus	0.01 µm
Korpus	Die-cast zinc, painted silver
Läbivoolu väärtuse mõõtmine	At P2 = 6 bar and pressure drop Δp = 1 bar



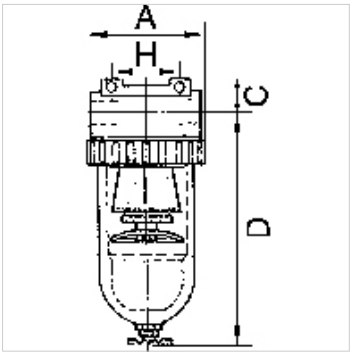

Vihje

Lisaandmed saate soovi korral.

Kirjeldus

For all applications with particularly strict compressed air purity requirements. The separating efficiency of these filters permits very fine oil vapour particles and micro-fine suspended particles to be filtered. A standard filter should always be connected upstream to trap coarse impurities and protect the micro-filter inserts.

Artikkel

Märgistus	Keere	Läbivool (L/min)	A (mm)	C (mm)	D (mm)	H (mm)	DN
K- 07 25 10 74	G 1/4	380	48,0	14,0	133,5	38,0	6
K- 07 25 10 77	G 3/8	380	48,0	14,0	133,5	38,0	6
K- 07 25 10 79	G 3/8	720	70,0	16,0	159,0	50,0	10
K- 07 25 10 81	G 1/2	1250	79,0	18,0	171,0	50,0	15
K- 07 25 10 84	G 3/4	7000	133,0	36,0	206,0	134,0	20
K- 07 25 10 87	G 1	7000	133,0	36,0	206,0	120,0	25

Varuosad

K-HALTERBAUSATZ STANDARD	Holder
K-FILTERELEMENT STANDARD	Filter element
K-SCHUTZKORB G	Protective cage
K-XV AGM MS NI	Double nipples, parallel male thread, nickel-plated brass
K-LOESBARE DOPPELNIPPEL MS	Double nipples

Vaatamata põhjalikule kontrollile ei saa me vigade esinemist välistada ning ei vastuta olemasolevate andmete eest.