K-DRG DRVS VARIOBLOC

Pressure regulators with pressure supply at both ends

HANSA-FLEX

Omadused

Sisendrõhk	Max. 25 bar
Aine temperatuur	max. 50 °C
Keskkonnatemperatuur	Max. 50 °C
Tihendusmaterjal	NBR
Vedrukate	POM-brass
Korpus	Die-cast zinc
Läbivoolu väärtuse mõõtmine	At P1 = 10 bar, P2 = 6 bar and pressure drop Δp = 1 bar



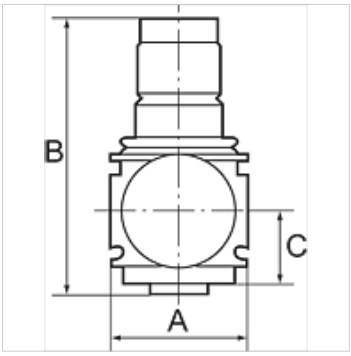

Vihje

Lisaandmed saate soovi korral.

Kirjeldus

Diaphragm pressure regulators with self-relieving design for mounting side by side. The pressure setting can be locked by pushing the knob down.
By assembling two or more controllers together, it is possible to supply several working air circuits with different output pressures via a single supply line.

Tellimisinfo

Pressure regulators are also available in lockable version. Please ask for more information.

Artikkel

Märgistus	Keere	Reguleerimisvahemik	Läbivool (L/min)	A (mm)	B	C (mm)
K- 07 25 04 33	G 1/4	0.5 - 6 bar	1800	48,0	98,0 mm	26,0
K- 07 25 04 34	G 1/4	0.5 - 10 bar	1800	48,0	98,0 mm	26,0
K- 07 25 04 35	G 1/4	0.5 - 16 bar	1800	48,0	98,0 mm	26,0
K- 07 25 04 36	G 3/8	0.5 - 6 bar	1800	48,0	98,0 mm	26,0
K- 07 25 04 37	G 3/8	0.5 - 10 bar	1800	48,0	98,0 mm	26,0
K- 07 25 04 38	G 3/8	0.5 - 16 bar	1800	48,0	98,0 mm	26,0

Varuosad

K-VERSCHLEI-SATZ VARIOBLOC	Set of wearing parts

Vaatamata põhjalikule kontrollile ei saa me vigade esinemist välistada ning ei vastuta olemasolevate andmete eest.