K-FI REGL METALLBEHAE S MANO VARIOB

Filter regulators with metal bowl, incl. sight glass and pressure gauge

HANSA FLEX

Omadused

Sisendrõhk	Max. 16 bar (polycarbonate bowl), Max. 20 bar (metal bowl)
Aine temperatuur	max. 50 °C
Keskkonnatemperatuur	Max. 50 °C (polycarbonate bowl), Max. 80 ° C (metal bowl)
Filterelemendi pooride suurus	40 µm
Tihendusmaterjal	NBR
Vedrukate	POM
Korpus	Die-cast zinc
Membraan	NBR
Drain valve	Manual
Läbivoolu väärtuse mõõtmine	At P1 = 10 bar, P2 = 6 bar and pressure drop Δp = 1 bar



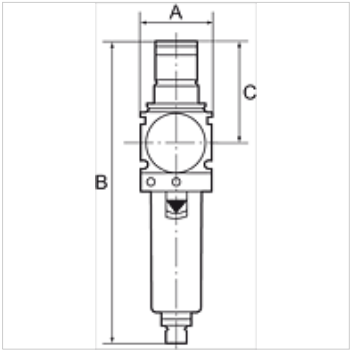

Vihje

Lisaandmed saate soovi korral.

Kirjeldus

Reversible diaphragm pressure regulators, independent of inlet pressure, with self-relieving design, combined with a centrifugal separator. The pressure setting can be locked by pushing the knob down. Approved series in modern industrial design, with the following key benefits: Simple handling, Convenient modular assembly thanks to innovative fasteners, Excellent flow values.

Tellimisinfo

Filter regulators are also available with bowl guard or metal bowl. Filter regulators are also available in lockable version. Please ask for more information.

Lisateave

Filter regulators are also available with bowl guard or metal bowl. Filter regulators are also available in lockable version. Please ask for more information.

Artikkel

Märgistus	Keere	Reguleerimisvahemik	Läbivool (L/min)	A (mm)	B	C (mm)
K- 07 25 06 86	G 1/4	0.5 - 10 bar	2000	48,0	203,0 mm	68,0
K- 07 25 06 88	G 3/8	0.5 - 10 bar	3000	48,0	203,0 mm	68,0
K- 07 25 06 90	G 1/2	0.5 - 10 bar	5500	70,0	273,0 mm	98,0
K- 07 25 06 92	G 3/4	0.5 - 10 bar	6500	70,0	273,0 mm	98,0
K- 07 25 06 94	G 1	0.5 - 10 bar	6500	124,0	273,0 mm	98,0

Varuosad

K-VERSCHLEI-SATZ VARIOBLOC	Set of wearing parts
K-ERSATZBEHAELTER VARIOBLOC POLY	Spare tank Polycarbonat
K-FILTERELEMENT VARIOBLOC	Filter element
K-ABLASSVENTIL AUTO	Fully-automatic drain valve with Adapter G 1/8

Vaatamata põhjalikule kontrollile ei saa me vigade esinemist välistada ning ei vastuta olemasolevate andmete eest.