K-SCHALTVENTILE 3/2 VAROBLOC

On-off valves (3/2-way valves)

Omadused

Kaitse tüüp	IP 65 acc. to DIN 40050
Tööröhk	3 to 10 bar
Läbivoolu väärtuse mõõtmine	At P1 = 6 bar and pressure drop Δp = 1 bar



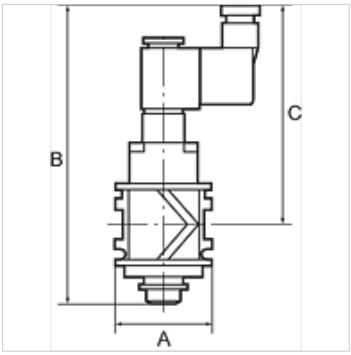

Vihje

Lisaandmed saate soovi korral.

Kirjeldus

For pressurising and relieving pneumatic systems. Ideal as the main "on" valve for service units. The pressure in the line is exhausted when the valve is switched off.

Artikkel

Märgistus	Keere	Läbivool (L/min)	A (mm)	Ühendus	B	C (mm)	Pinge
K- 07 25 11 94	G 1/4	2200	48,0	Device plug PG 9, type B, EN 175301-803	147,0 mm	108,0	24 V DC
K- 07 25 11 95	G 3/8	2600	48,0	Device plug PG 9, type B, EN 175301-803	147,0 mm	108,0	24 V DC
K- 07 25 11 96	G 1/2	3300	70,0	Device plug PG 9, type B, EN 175301-803	157,0 mm	113,0	24 V DC
K- 07 25 11 97	G 3/4	3800	70,0	Device plug PG 9, type B, EN 175301-803	157,0 mm	113,0	24 V DC
K- 07 25 11 98	G 1	3800	124,0	Device plug PG 9, type B, EN 175301-803	157,0 mm	113,0	24 V DC

Varuosad

K-MAGNETSPULE VARIOBLOC	Solenoid
K-GERAETESTECKER	Coupling socket

Vaatamata põhjalikule kontrollile ei saa me vigade esinemist välistada ning ei vastuta olemasolevate andmete eest.