K-WTEH 3-TLG MET SICH TROPF VARIOBL

Service units, 3-piece with metal bowl, incl. sight glass and metal sight dome

HANSA-FLEX

Omadused

Sisendrõhk	Max. 16 bar (polycarbonate bowl), Max. 20 bar (metal bowl)
Aine temperatuur	max. 50 °C
Keskkonnatemperatuur	Max. 50 °C (polycarbonate bowl), Max. 80 ° C (metal bowl)
Filterelemendi pooride suurus	40 µm
Tihendusmaterjal	NBR
Vedrukate	POM
Korpus	Die-cast zinc
Membraan	NBR
Tilgapüüdur	PA
Drain valve	Manual
Läbivoolu väärtuse mõõtmine	At P1 = 10 bar, P2 = 6 bar and pressure drop Δp = 1 bar



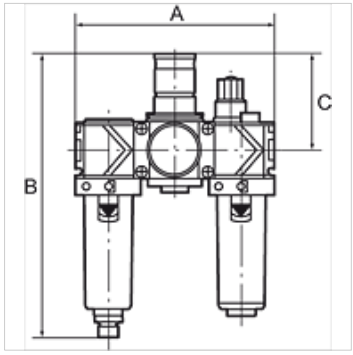

Vihje

Lisaandmed saate soovi korral.

Kirjeldus

Two or three-piece service units consisting of a reversible diaphragm pressure regulator, independent of inlet pressure, with self-relieving design, combined with a centrifugal separator and a proportional lubricator. Approved series in modern industrial design, with the following key benefits: Simple handling, Convenient modular assembly thanks to innovative fasteners, Excellent flow values.

Tellimisinfo

Service units are also available with bowl guard or metal bowl. Service units are also available in other control ranges (0.5 - 6 bar and 0.5 - 16 bar) and in lockable version. Please ask for more information.

Lisateave

Service units are also available with bowl guard or metal bowl. Service units are also available in other control ranges.

Artikkel

Märgistus	Keere	Reguleerimisvahemik	Läbivool (L/min)	A (mm)	B	C (mm)
K- 07 25 14 12	G 1/4	0.5 - 10 bar	1500	144,0	201,0 mm	68,0
K- 07 25 14 14	G 3/8	0.5 - 10 bar	1800	144,0	201,0 mm	68,0
K- 07 25 14 16	G 1/2	0.5 - 10 bar	3400	210,0	274,0 mm	98,0
K- 07 25 14 18	G 3/4	0.5 - 10 bar	5000	210,0	274,0 mm	98,0
K- 07 25 14 20	G 1	0.5 - 10 bar	5000	264,0	274,0 mm	98,0

Varuosad

K-VERSCHLEI-SATZ VARIOBLOC	Set of wearing parts
K-FILTERELEMENT VARIOBLOC	Filter element
K-ERSATZBEHAELTER VARIOBLOC POLY	Spare tank Polycarbonat
K-TROPFAUFSATZ VARIOBLOC	Drip attachment
K-ABLASSVENTIL AUTO	Fully-automatic drain valve with Adapter G 1/8

Vaatamata põhjalikule kontrollile ei saa me vigade esinemist välistada ning ei vastuta olemasolevate andmete eest.