K-STOPPVENTILE STECK

Stop valves, ports 2 and 3 with plug connection

Omadused

Tööröhk	Max. 10 bar
Juhtimisröhk	1 - 5 bar, depending on operating pressure
Aine temperatuur	max. 70 °C
Paigaldusasend	Any. Ring pieces can still be rotated 360° after the valve has been tightened
Tihendusmaterjal	Perbunan



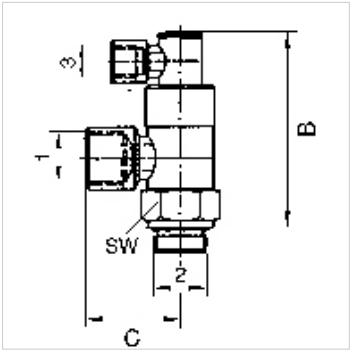

Vihje

Lisaandmed saate soovi korral.

Kirjeldus

For high-speed positioning and stop functions as well as emergency switching (e.g. emergency stop). If a control signal is present at port 3, air can flow to and from the cylinder. If no control signal is present, the air flow to and from the cylinder is shut off, causing the cylinder to stop in the required position. Stop valves are screwed directly onto the cylinder instead of the normal pipe connections.

Artikkel

Märgistus	Port 1	Port 2	Ühendus 3	Materjal	B (mm)	C (mm)
K- 07 15 20 50	G 1/8	6 mm	4 mm	Nickel-plated brass	52,0	25,0
K- 07 15 20 49	G 1/4	6 mm	4 mm	Nickel-plated brass	58,0	28,0
K- 07 15 20 51	G 3/8	8 mm	4 mm	Nickel-plated brass	63,0	32,0
K- 07 15 20 48	G 1/2	12 mm	4 mm	Nickel-plated brass	72,0	41,0

Vaatamata põhjalikule kontrollile ei saa me vigade esinemist välistada ning ei vastuta olemasolevate andmete eest.