K-BKR KL SERIE 374

Ball valves, 374 series

Omadused

Tööröhk	max. 70 bar (Depending on Temperature)
Töötemperatuur	Max. 150 °C
Tihend	PTFE
Käsihoob	Stainless steel 1.4301



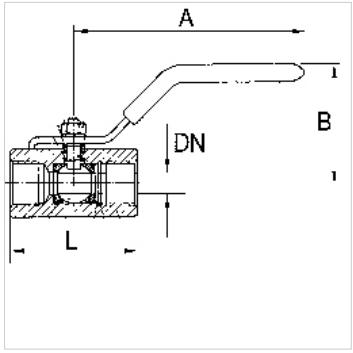

Vihje

G thread acc. to DIN EN ISO 228-1, with ISO flange plate (acc. to ISO 5211)
Lisaandmed saate soovi korral.

Tellimisinfo

For use on devices that have to be vented whenever they are turned off, either because of safety regulations or for technical reasons. The pneumatic devices are disconnected from the system and simultaneously vented each time they are shut off.

Lisateave

G thread acc. DIN EN ISO 228-1

Artikkel

Märgistus	DN	Keere	A (mm)	B (mm)	L (mm)	Materjal
K- 07 30 15 32	5	G 1/4	62,0	30,0	47,0	Stainless steel 1.4401/1.4408
K- 07 30 15 33	7	G 3/8	82,0	30,0	51,0	Stainless steel 1.4401/1.4408
K- 07 30 15 34	9	G 1/2	92,0	45,0	64,0	Stainless steel 1.4401/1.4408
K- 07 30 15 35	13	G 3/4	94,0	50,0	68,0	Stainless steel 1.4401/1.4408

Vaatamata põhjalikule kontrollile ei saa me vigade esinemist välistada ning ei vastuta olemasolevate andmete eest.