K-BKR SCHW STAHLHEBEL IG IG

Ball valves with black steel lever, lighweight type, female/female thread

Omadused

Rakendusvaldkond	Compressed air, water, non-toxic and non-corrosive gases, heating systems, agriculture
Tööröhk	Max. 40 bar
Töötemperatuur	-15 °C to +90 °C
Keerme kirjeldus	G thread acc. DIN EN ISO 228-1
Korpus	Nickel-plated brass
Hoob	Steel, with plastic coating
Kuul	Chrome-plated brass
Kuuli tihend	PTFE
Spindli tihend	HNBR / EPDM / PTFE. 2 O-Rings (HNBR / EPDM) 1 gasket (PTFE) additional PTFE-gasket

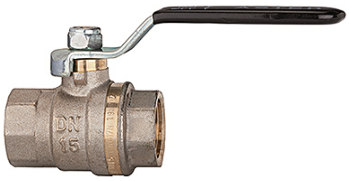

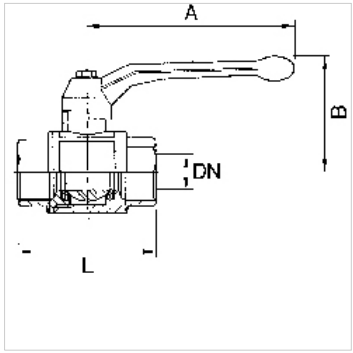

Vihje

Lisaandmed saate soovi korral.

Artikkel

Märgistus	DN	Keere	A (mm)	B (mm)	L (mm)
K- 07 30 00 83	8	G 1/4	85,0	42,0	39,0
K- 07 30 00 87	10	G 3/8	85,0	42,0	43,0
K- 07 30 00 91	15	G 1/2	85,0	46,0	50,0
K- 07 30 00 95	20	G 3/4	105,0	53,0	58,0
K- 07 30 00 99	25	G 1	105,0	57,0	69,0
K- 07 30 01 03	32	G 1 1/4	130,0	70,0	81,0
K- 07 30 01 07	40	G 1 1/2	130,0	76,0	93,0
K- 07 30 01 11	50	G 2	165,0	92,0	110,0

Vaatamata põhjalikule kontrollile ei saa me vigade esinemist välistada ning ei vastuta olemasolevate andmete eest.