K-ZFL ABSP-KLAPPEN DOPPEL

Butterfly valves, with double-acting actuator, min. pilot pressure 5 bar

HANSA FLEX

Omadused

Tüüp	Pneumatic actuators, in double- or single acting version
Tööröhk	Max. 16 bar
Töötemperatuur	-15 °C to +120 °C
Vahendid	Water / steam, salt water, salt water, ester, ketone, alkali, caustic soda, sodium hydroxide. Not recommended for hydrocarbons
Juhtimisröhk	5.5 bar
Ventiili adapter	Supplied as standard, operated by a 3/2- or 5/2-way valve
Pöördnurk	90 °
Ajam	aluminium eloxed
Ajami tihend	NBR
Korpus	Grey cast iron GG25 epoxy resin coated, RAL 5015
Tihend	EPDM
Võll	SS416
Võllitihend	EPDM
Juhtimine	



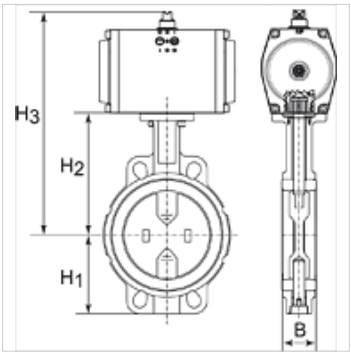

Vihje

Lisaandmed saate soovi korral.

Artikkel

Märgistus	Ketas	DN	B (mm)	H1 (mm)	H2 (mm)	H3 (mm)	L (mm)
K- 07 30 03 28	Stainless Steel CF8M/1.4404	40	38,0	68,0	108,0	212,0	94,0
K- 07 30 03 29	Stainless Steel CF8M/1.4404	50	47,0	71,0	143,0	247,0	100,0
K- 07 30 03 30	Stainless Steel CF8M/1.4404	65	49,0	78,0	155,0	259,0	115,0
K- 07 30 03 31	Stainless Steel CF8M/1.4404	80	47,0	89,0	162,0	280,0	127,0
K- 07 30 03 32	Stainless Steel CF8M/1.4404	100	56,0	102,0	178,0	308,0	163,0
K- 07 30 03 33	Stainless Steel CF8M/1.4404	125	59,0	123,0	191,0	321,0	190,0
K- 07 30 03 35	Stainless Steel CF8M/1.4404	150	59,0	138,0	205,0	352,0	216,0

Vaatamata põhjalikule kontrollile ei saa me vigade esinemist välistada ning ei vastuta olemasolevate andmete eest.