K-FI AK KOH PC-BEHAEL VARIOBLOC

Activated carbon filters with polycarbonate bowl

Omadused

Sisendrõhk	Max. 16 bar (polycarbonate bowl), Max. 20 bar (metal bowl)
Aine temperatuur	max. 50 °C
Keskkonnatemperatuur	Max. 50 °C (polycarbonate bowl), Max. 80 °C (metal bowl)
Õhu kvaliteet standardi ISO 85731 järgi	Class 1 dirt, class 1 oil
Jääkõli sisaldus	0,003 mg/m3
Läbivoolu väärtuse mõõtmine	At P1 = 7 bar and pressure drop Δp = 0,1 bar



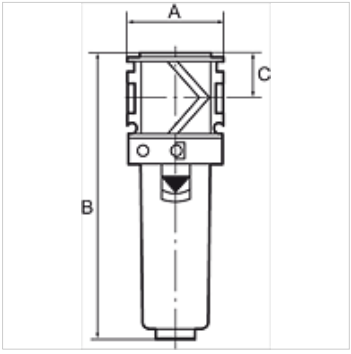

Vihje

Activated carbon filters are also supplied with protective cage or metal container.
Lisaandmed saate soovi korral.

Kirjeldus

The activated carbon filter absorbs oil vapour from the compressed air. The entering compressed air needs to be dry and free of contaminants (an upstream microfilter is strongly recommended).

Artikkel

Märgistus	Keere	Läbivool (L/min)	A (mm)	B	C (mm)
K- 07 25 19 59	G 1/4	800	48,0	142,0 mm	22,0
K- 07 25 19 60	G 3/8	1000	48,0	142,0 mm	22,0
K- 07 25 19 61	G 1/2	1200	70,0	193,0 mm	26,0
K- 07 25 19 62	G 3/4	1300	70,0	193,0 mm	26,0
K- 07 25 19 63	G 1	1300	124,0	193,0 mm	26,0

Vaatamata põhjalikule kontrollile ei saa me vigade esinemist välistada ning ei vastuta olemasolevate andmete eest.