K-DRV GEW V SCHLITZ

Unidirectional flow control valves, incoming air restriction (»V«), screw connection

Omadused

Tööröhk	max 10 baari
Temperatuuri ulatus	0 °C to +70 °C
Õõneskruvi, liigendvars, reguleerimiskruvi	Nickel-plated brass
Sisedetail	Brass with a bare metal surface
O-rõngas huultihend	NBR
Tihendid (kadumatu)	Polyamide (glass fibre-reinforced)



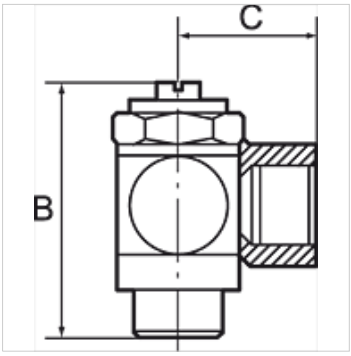

Vihje

Lisaandmed saate soovi korral.

Kirjeldus

For fine regulation of a cylinder piston speed in the forward and return motion and precise control of flow rates. Designed as a banjo-type valve with a hollow bolt and ring piece. Can be screwed directly onto the valve or cylinder to restrict the incoming air. Compact type of construction, also ideal where space is restricted.

Artikkel

Märgistus	Ühendus	C (mm)	Keere	SW	B (mm)
K- 07 15 25 21	M 5 female thread	11,5	M 5	8 mm	24,5
K- 07 15 05 70	G 1/8 female thread	16,0	G 1/8	14 mm	32,0
K- 07 15 05 66	G 1/4 female thread	22,0	G 1/4	17 mm	40,0
K- 07 15 25 22	G 3/8 female thread	26,0	G 3/8	20 mm	50,0

Vaatamata põhjalikule kontrollile ei saa me vigade esinemist välistada ning ei vastuta olemasolevate andmete eest.