K-KLEMMBUEGEL IG

Clamp strap with female thread

Omadused

Materjal	nickel plated iron



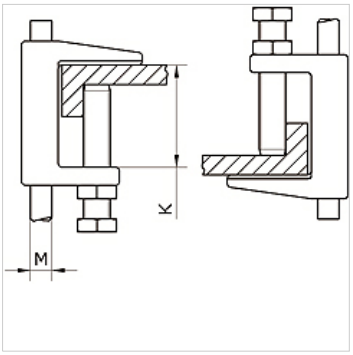

Artikkel

Märgistus	Keere	K (mm)
K- 07 40 54 92	M 8	18