K-HAND-SCHIEBEVENTIL
Manual slide valves

HANSA-FLEX

Caractéristiques

Pression de service	maxi 10 bar
Température de service	max. +70 °C



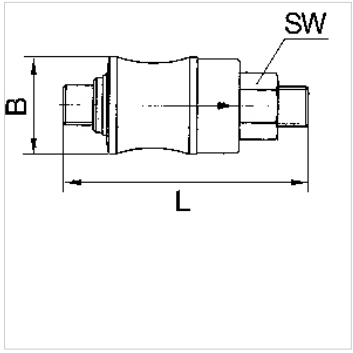

Remarque

Autres informations sur demande.

Description

For use on devices that have to be vented whenever they are turned off, either because of safety regulations or for technical reasons. The pneumatic devices are disconnected from the system and simultaneously vented each time they are shut off.

Article

Désignation	Filets	B (mm)	L (mm)	SW (mm)
K- 07 30 15 92	G 1/8	21,0	67,0	14
K- 07 30 15 93	G 1/4	24,0	77,0	17
K- 07 30 15 94	G 3/8	31,0	87,0	22
K- 07 30 15 95	G 1/2	35,0	104,0	26

En dépit du soin apporté aux vérifications, nous ne pouvons garantir une absence totale d'erreur et ne saurions être tenus responsables des indications contenues.