K-BKR SERIE VALVE LINE

Stainless steel ball valves

Caractéristiques

Pression de service	max. 70 bar, depending on temperature and nominal size
Température de service	-15 °C to +110 °C, depending on port size and temperature
Description filetage	G thread acc. DIN EN ISO 228-1
Joint d'étanchéité	PTFE
Manette	Stainless steel 1.4301
Matériau	sealing: PTFE



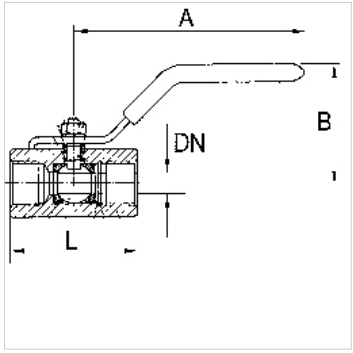

Remarque

Autres informations sur demande.

Article

Désignation	DN	Filets	A (mm)	B (mm)	L (mm)	Matériau
K- 07 30 15 24	13	1/4	99,5	47,0	47,5	Stainless steel 1.4408
K- 07 30 15 25	13	3/8	99,5	47,0	47,5	Stainless steel 1.4408
K- 07 30 15 26	15	1/2	99,5	48,0	58,0	Stainless steel 1.4408
K- 07 30 15 27	20	3/4	126,5	62,0	65,0	Stainless steel 1.4408
K- 07 30 15 28	25	1	126,5	69,0	77,0	Stainless steel 1.4408
K- 07 30 15 29	32	1 1/4	153,0	81,0	90,0	Stainless steel 1.4408
K- 07 30 15 30	38	1 1/2	153,0	87,0	98,5	Stainless steel 1.4408
K- 07 30 15 31	50	2	192,0	95,0	122,0	Stainless steel 1.4408

En dépit du soin apporté aux vérifications, nous ne pouvons garantir une absence totale d'erreur et ne saurions être tenus responsables des indications contenues.